Dist	COUNTY	ROUTE	POST MILES TOTAL PROJECT	SHEET No.	TOTAL SHEETS

REGISTERED CIVIL ENGINEER DATE

PLANS APPROVAL DATE

REGISTERED PROFESSIONAL ENGINEER No. Exp. CIVIL STATE OF CALIFORNIA

THE STATE OF CALIFORNIA OR ITS OFFICERS OR AGENTS SHALL NOT BE RESPONSIBLE FOR THE ACCURACY OR COMPLETENESS OF SCANNED COPIES OF THIS PLAN SHEET.

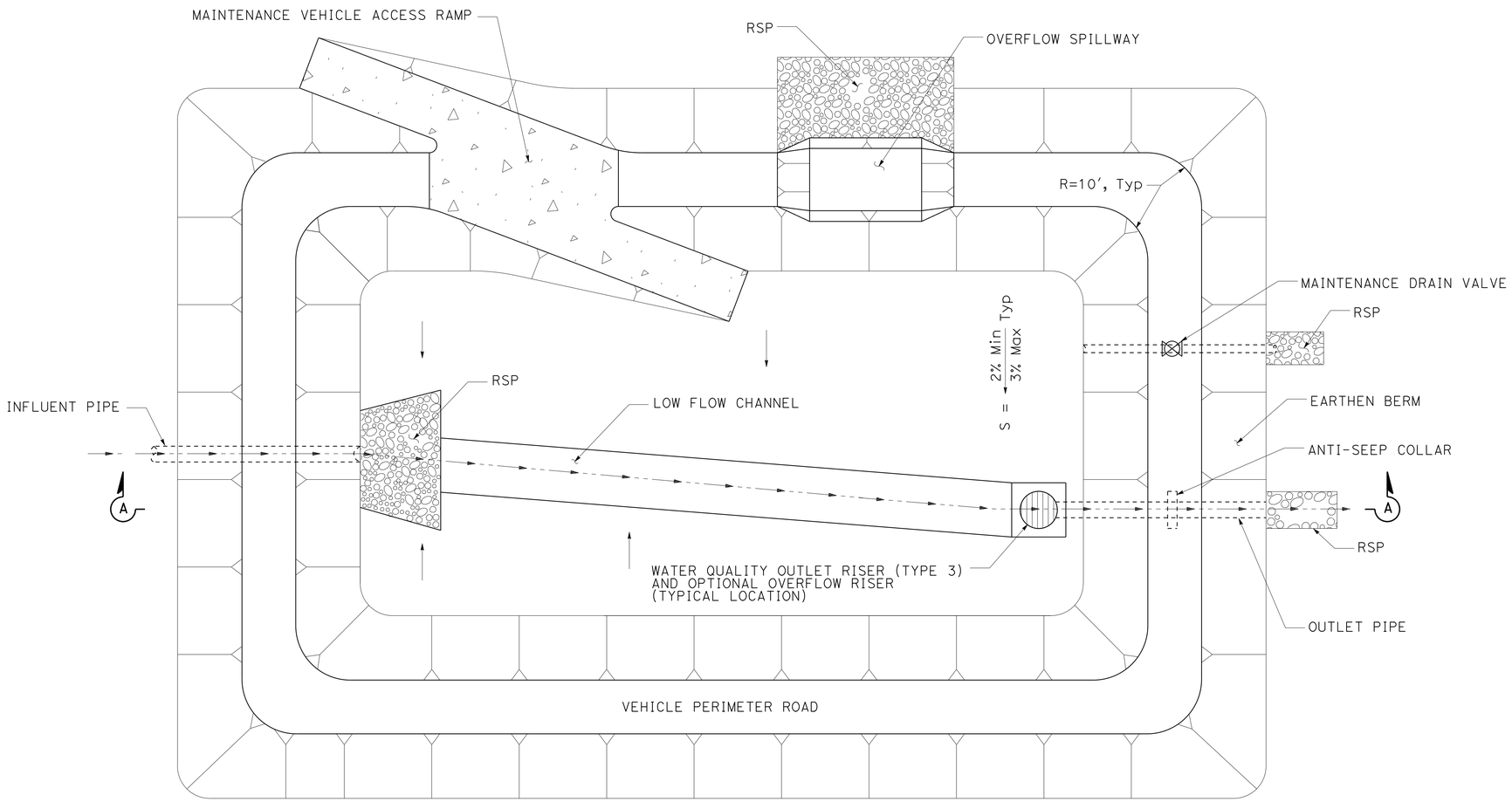

PLAN

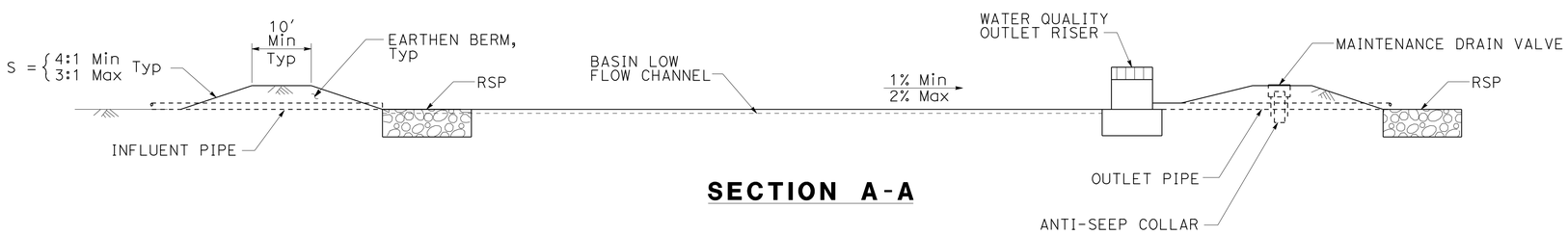

SECTION A-A

DETENTION BASIN

NO SCALE

FIGURE 1-1

STATE OF CALIFORNIA - DEPARTMENT OF TRANSPORTATION

Caltrans

FUNCTIONAL SUPERVISOR

CALCULATED-DESIGNED BY

CHECKED BY

REVISED BY

DATE REVISED

LAST REVISION 00-00-00

DATE PLOTTED => 17-JUN-2013

TIME PLOTTED => 10:21

Dist	COUNTY	ROUTE	POST MILES TOTAL PROJECT	SHEET No.	TOTAL SHEETS

REGISTERED CIVIL ENGINEER DATE

PLANS APPROVAL DATE

REGISTERED PROFESSIONAL ENGINEER No. Exp. CIVIL STATE OF CALIFORNIA

THE STATE OF CALIFORNIA OR ITS OFFICERS OR AGENTS SHALL NOT BE RESPONSIBLE FOR THE ACCURACY OR COMPLETENESS OF SCANNED COPIES OF THIS PLAN SHEET.

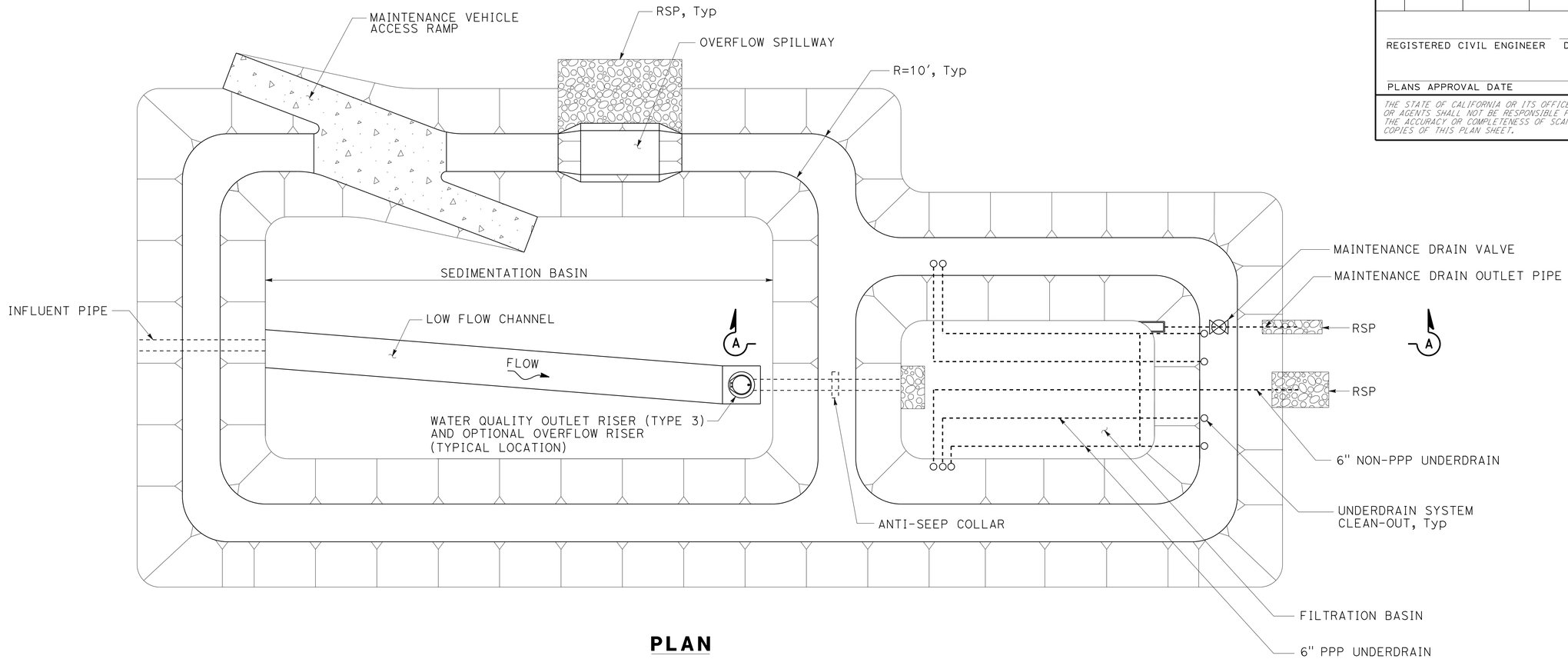

PLAN

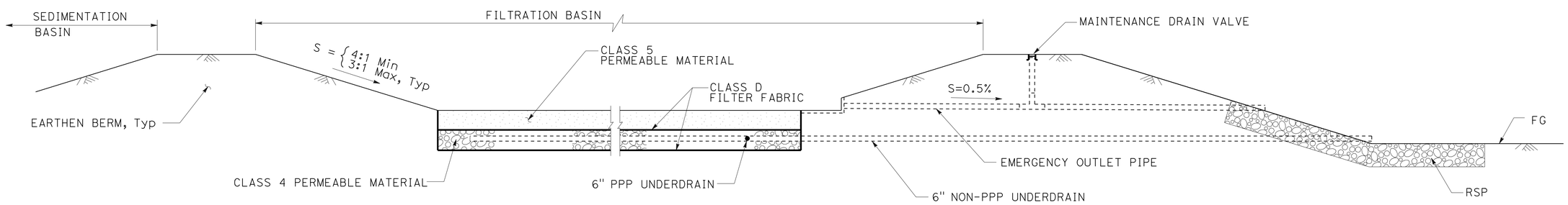

SECTION A-A

MEDIA FILTER (AUSTIN, EARTHEN BERM-FULL)

NO SCALE

FIGURE 1-2

REVISED BY | DATE REVISED

CALCULATED-DESIGNED BY | CHECKED BY

FUNCTIONAL SUPERVISOR

STATE OF CALIFORNIA - DEPARTMENT OF TRANSPORTATION

Caltrans

LAST REVISION 00-00-00 | DATE PLOTTED => 17-JUN-2013 | TIME PLOTTED => 10:21

Dist	COUNTY	ROUTE	POST MILES TOTAL PROJECT	SHEET No.	TOTAL SHEETS

REGISTERED CIVIL ENGINEER DATE

PLANS APPROVAL DATE

REGISTERED PROFESSIONAL ENGINEER No. Exp. CIVIL STATE OF CALIFORNIA

THE STATE OF CALIFORNIA OR ITS OFFICERS OR AGENTS SHALL NOT BE RESPONSIBLE FOR THE ACCURACY OR COMPLETENESS OF SCANNED COPIES OF THIS PLAN SHEET.

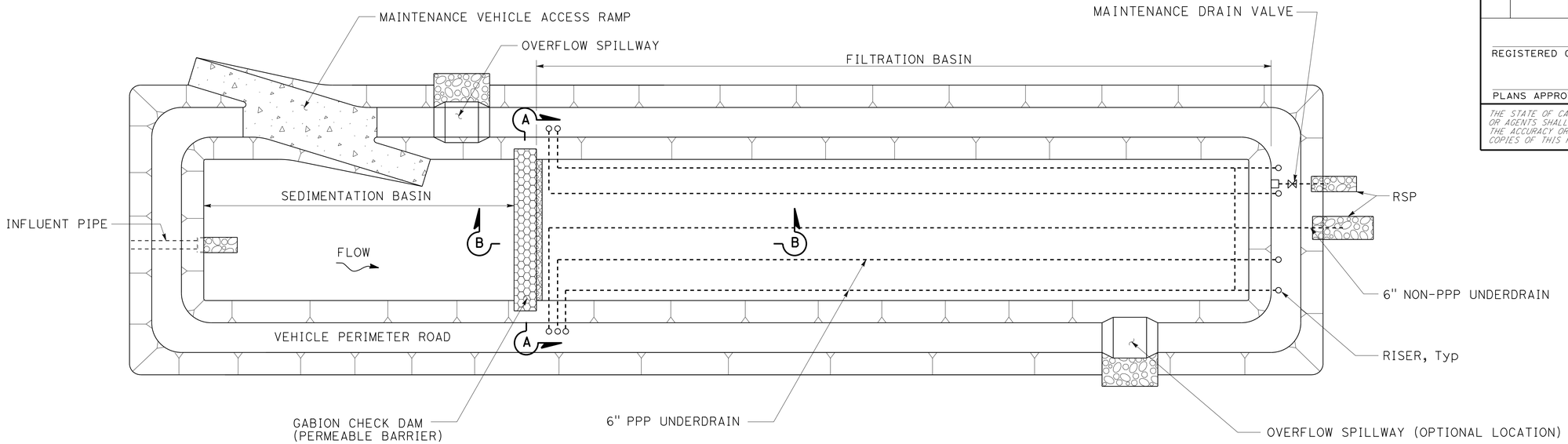

PLAN

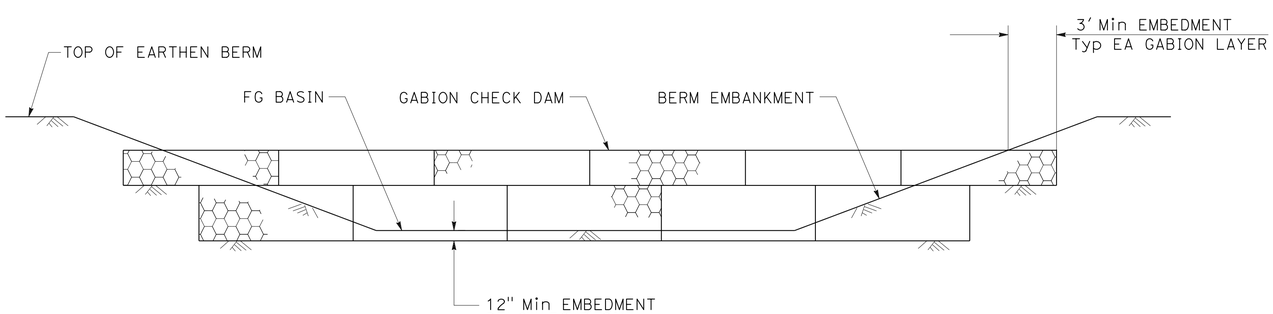

SECTION A-A

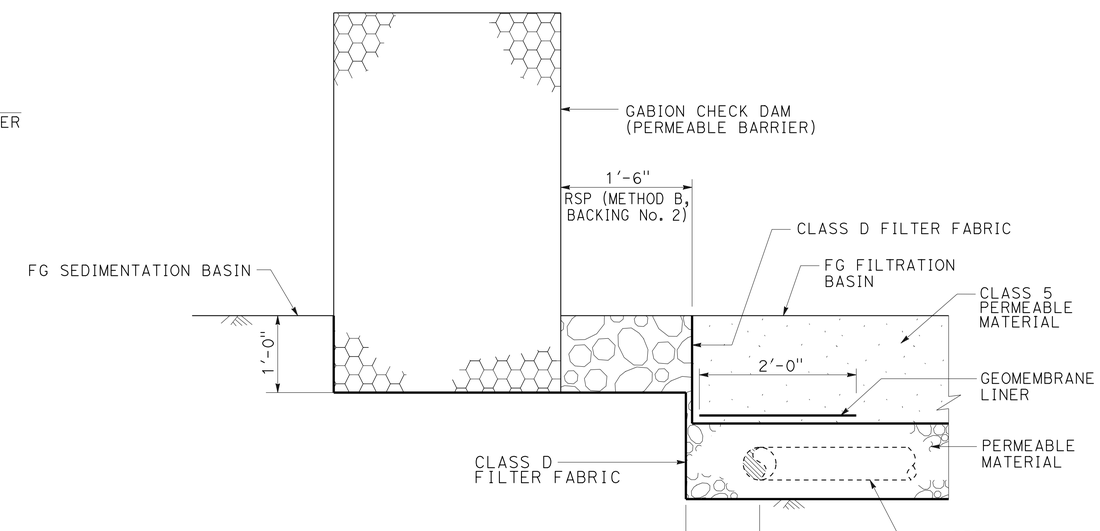

SECTION B-B

MEDIA FILTER
(AUSTIN, EARTHEN BERM-PARTIAL)

NO SCALE

FIGURE 1-3

REVISED BY | DATE REVISED

CALCULATED-DESIGNED BY | CHECKED BY

FUNCTIONAL SUPERVISOR

STATE OF CALIFORNIA - DEPARTMENT OF TRANSPORTATION

Caltrans

LAST REVISION 00-00-00 | DATE PLOTTED => 17-JUN-2013 | TIME PLOTTED => 10:21

Dist	COUNTY	ROUTE	POST MILES TOTAL PROJECT	SHEET No.	TOTAL SHEETS

REGISTERED CIVIL ENGINEER DATE

PLANS APPROVAL DATE

REGISTERED PROFESSIONAL ENGINEER No. Exp. CIVIL STATE OF CALIFORNIA

THE STATE OF CALIFORNIA OR ITS OFFICERS OR AGENTS SHALL NOT BE RESPONSIBLE FOR THE ACCURACY OR COMPLETENESS OF SCANNED COPIES OF THIS PLAN SHEET.

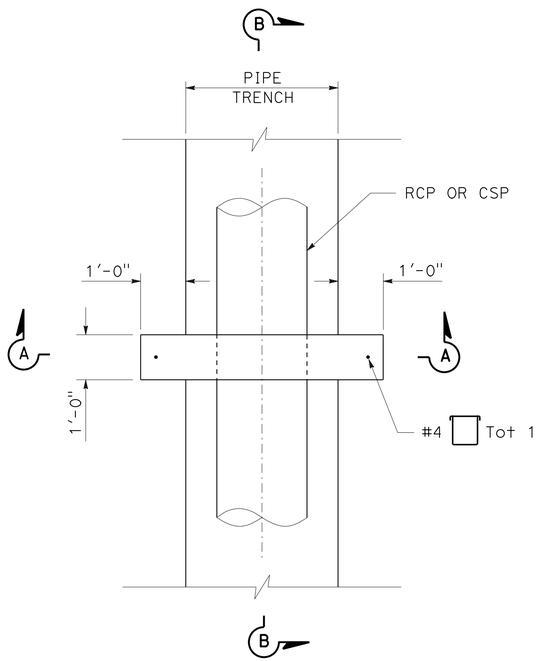

PLAN

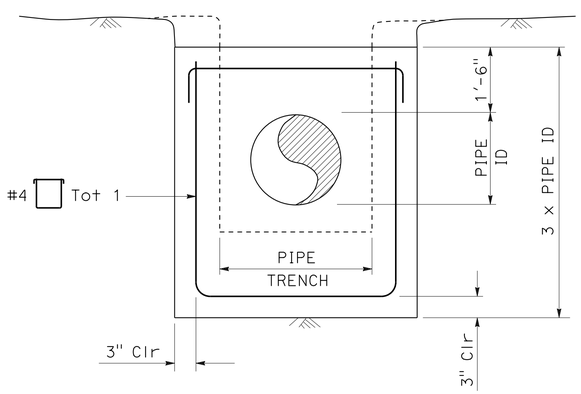

SECTION A-A

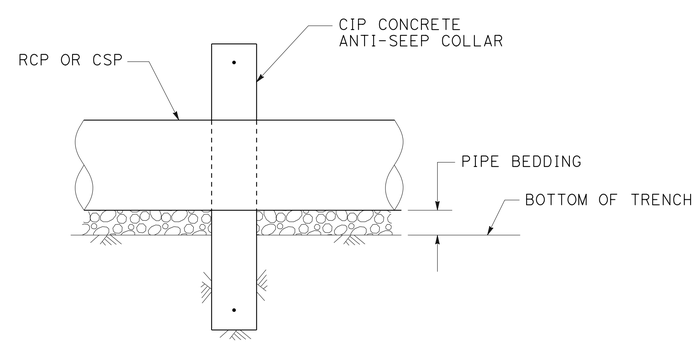

SECTION B-B

NOTES:

1. Construct collar against undisturbed or compacted embankment material.
2. Collar to be constructed plumb.

ANTI-SEEP COLLAR

NO SCALE

FIGURE 2-1

REVISED BY | DATE REVISED

CALCULATED-DESIGNED BY | CHECKED BY

FUNCTIONAL SUPERVISOR

STATE OF CALIFORNIA - DEPARTMENT OF TRANSPORTATION

Caltrans

LAST REVISION 00-00-00 | DATE PLOTTED => 17-JUN-2013 | TIME PLOTTED => 10:21

Dist	COUNTY	ROUTE	POST MILES TOTAL PROJECT	SHEET No.	TOTAL SHEETS

REGISTERED CIVIL ENGINEER DATE

PLANS APPROVAL DATE

REGISTERED PROFESSIONAL ENGINEER No. Exp. CIVIL STATE OF CALIFORNIA

THE STATE OF CALIFORNIA OR ITS OFFICERS OR AGENTS SHALL NOT BE RESPONSIBLE FOR THE ACCURACY OR COMPLETENESS OF SCANNED COPIES OF THIS PLAN SHEET.

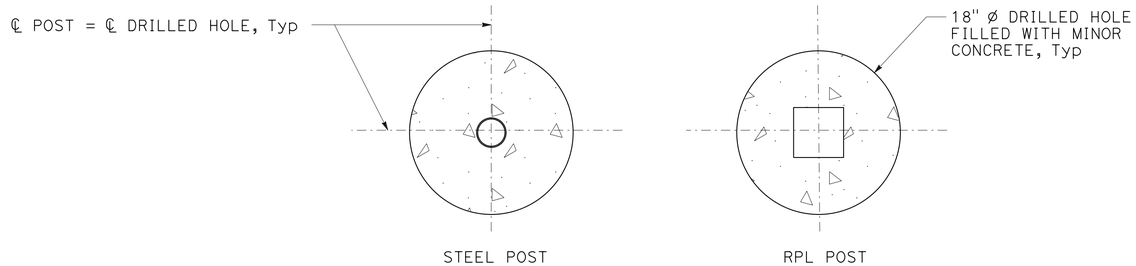

SECTION A-A

NOTES:

1. No plank splices allowed at end posts.
2. All RPL members to be solid.
3. All bolts and hardware must be galvanized.
4. Minimum allowable lateral soil-bearing pressure of 400 psf required.
5. For Section B-B, Section C-C, and Plank Anchorage detail, see "Baffle Wall Details No. 2" sheet.

ABBREVIATIONS:

RPL - RECYCLED PLASTIC LUMBER

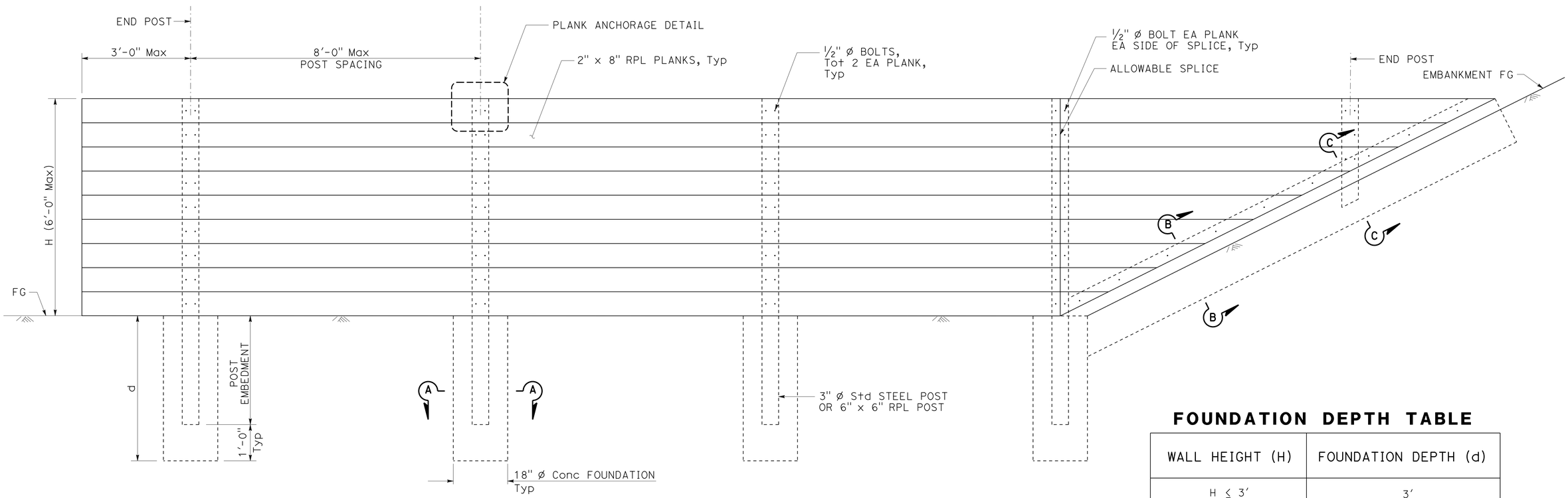

ELEVATION

FOUNDATION DEPTH TABLE

WALL HEIGHT (H)	FOUNDATION DEPTH (d)
H ≤ 3'	3'
H > 3'	4'

BAFFLE WALL DETAILS No. 1

NO SCALE

FIGURE 3-1

REVISED BY | DATE REVISED

CALCULATED-DESIGNED BY | CHECKED BY

FUNCTIONAL SUPERVISOR

STATE OF CALIFORNIA - DEPARTMENT OF TRANSPORTATION

Caltrans

LAST REVISION 00-00-00 | DATE PLOTTED => 17-JUN-2013 | TIME PLOTTED => 10:21

Dist	COUNTY	ROUTE	POST MILES TOTAL PROJECT	SHEET No.	TOTAL SHEETS

REGISTERED CIVIL ENGINEER DATE

PLANS APPROVAL DATE

REGISTERED PROFESSIONAL ENGINEER No. Exp. CIVIL STATE OF CALIFORNIA

THE STATE OF CALIFORNIA OR ITS OFFICERS OR AGENTS SHALL NOT BE RESPONSIBLE FOR THE ACCURACY OR COMPLETENESS OF SCANNED COPIES OF THIS PLAN SHEET.

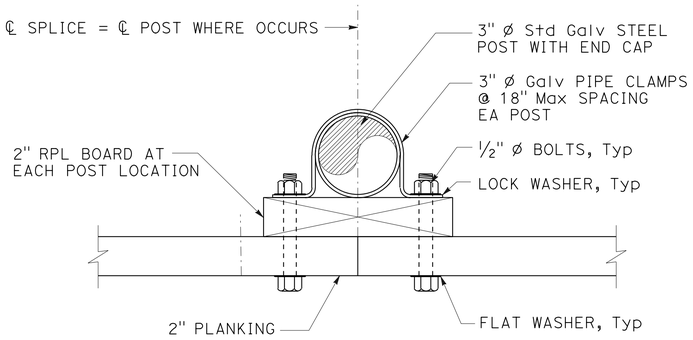

STEEL POST

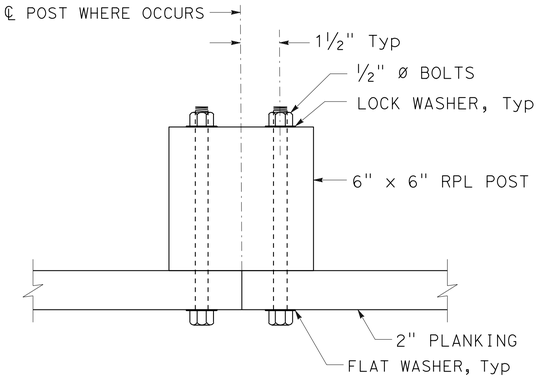

RPL POST

DESIGN DATA:

WIND LOADING:
Normal to face of wall: 23 psf

CONCRETE FOUNDATIONS:
Minor Concrete
Bar Reinforcement: F_y =60,000 psi
Lateral Soil Bearing Pressure: 400 psf/ft

RECYCLED PLASTIC LUMBER (RPL):
Modulus of Elasticity: 114,000 psi
Allowable Flexural Stress: 1,200 psi

STRUCTURAL STEEL PIPE & HARDWARE:
F_y =36,000 psi (Min)
ASTM A306 Steel Bolts and Anchors

NOTES:

1. All RPL members to be solid.
2. All bolts and hardware must be galvanized.
3. For location of Section B-B and Section C-C, see "Baffle Wall Details No. 1" sheet.
4. Reinforcement may be discontinuous at post locations.

PLANK ANCHORAGE DETAILS

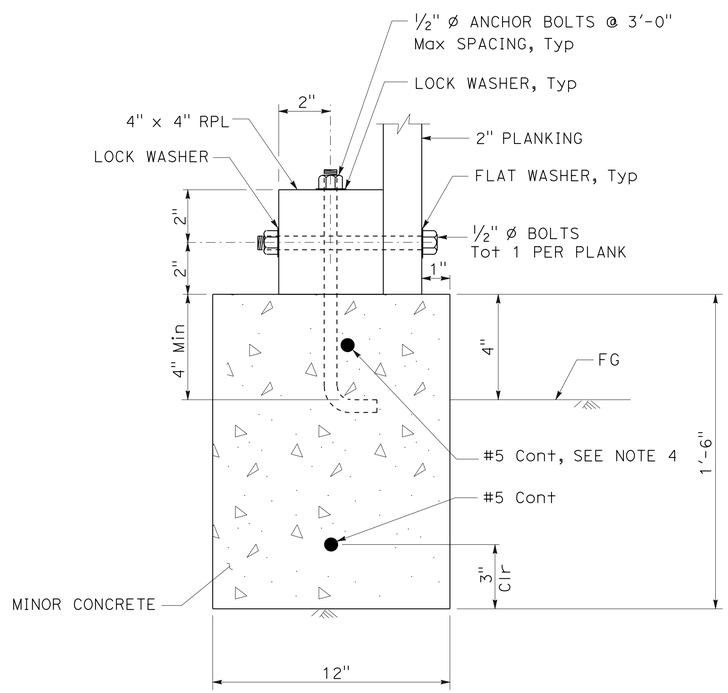

SECTION B-B

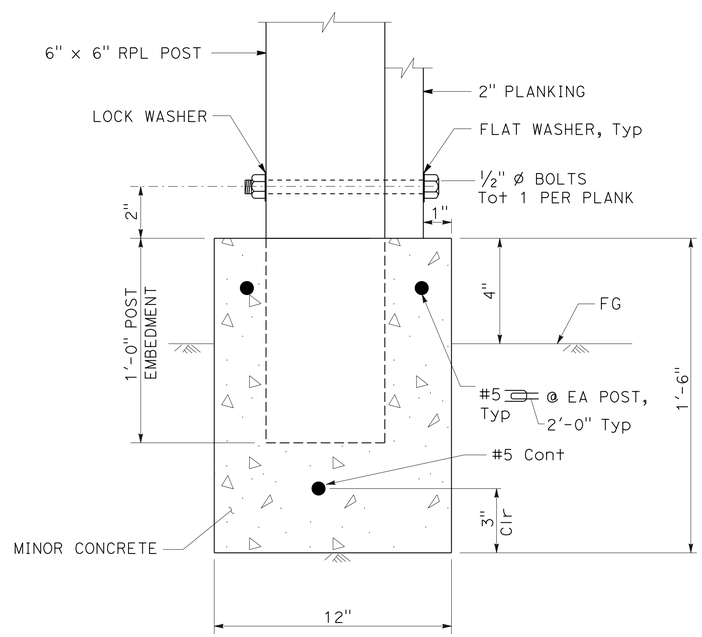

RPL POST

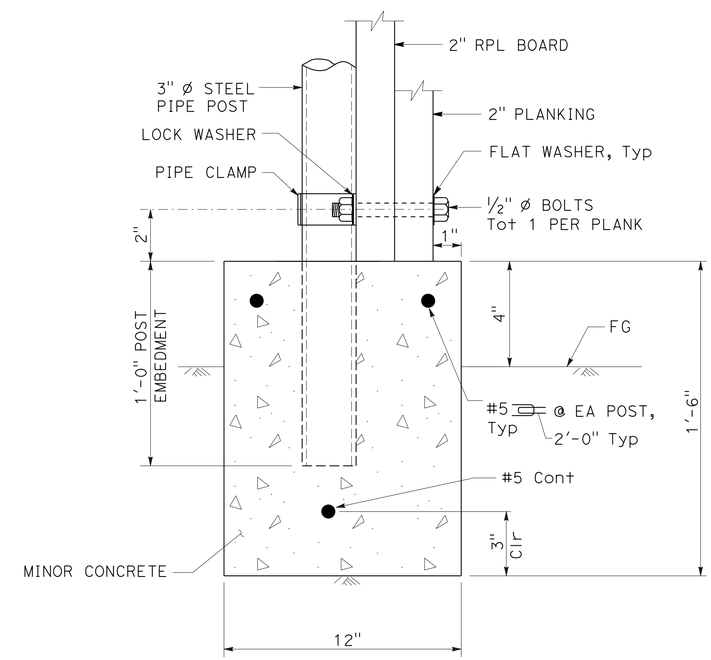

STEEL PIPE POST

SECTION C-C

BAFFLE WALL DETAILS No. 2

NO SCALE

FIGURE 3-2

STATE OF CALIFORNIA - DEPARTMENT OF TRANSPORTATION

Caltrans

FUNCTIONAL SUPERVISOR

CALCULATED-DESIGNED BY | CHECKED BY

REVISED BY | DATE REVISED

LAST REVISION 00-00-00 | DATE PLOTTED => 17-JUN-2013 | TIME PLOTTED => 10:21

Dist	COUNTY	ROUTE	POST MILES TOTAL PROJECT	SHEET No.	TOTAL SHEETS

REGISTERED CIVIL ENGINEER DATE

PLANS APPROVAL DATE

REGISTERED PROFESSIONAL ENGINEER No. Exp. CIVIL STATE OF CALIFORNIA

THE STATE OF CALIFORNIA OR ITS OFFICERS OR AGENTS SHALL NOT BE RESPONSIBLE FOR THE ACCURACY OR COMPLETENESS OF SCANNED COPIES OF THIS PLAN SHEET.

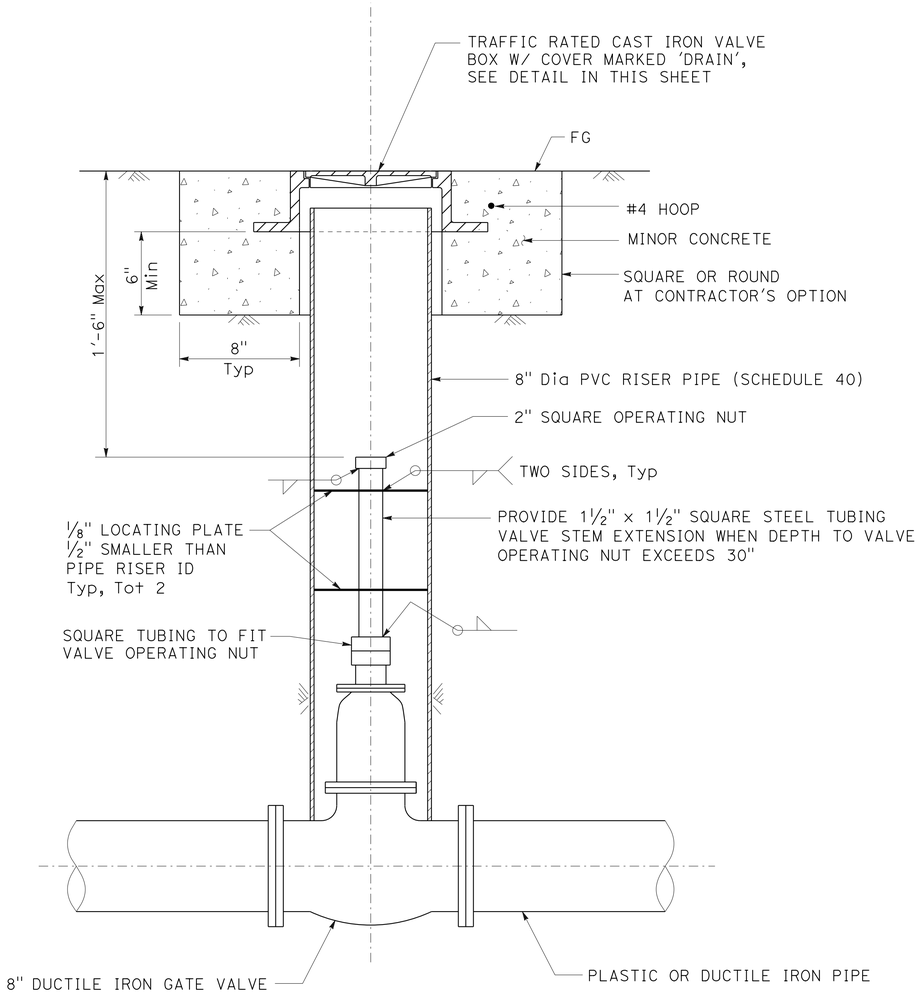

MAINTENANCE DRAIN VALVE DETAIL

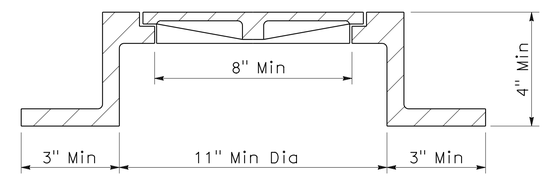

VALVE BOX AND COVER DETAIL

MAINTENANCE DRAIN VALVE

NO SCALE

FIGURE 4-1

STATE OF CALIFORNIA - DEPARTMENT OF TRANSPORTATION

Caltrans

FUNCTIONAL SUPERVISOR

CALCULATED-DESIGNED BY | CHECKED BY

REVISED BY | DATE REVISED

LAST REVISION 00-00-00 | DATE PLOTTED => 17-JUN-2013 | TIME PLOTTED => 10:21

Dist	COUNTY	ROUTE	POST MILES TOTAL PROJECT	SHEET No.	TOTAL SHEETS

REGISTERED CIVIL ENGINEER DATE

PLANS APPROVAL DATE

REGISTERED PROFESSIONAL ENGINEER No. Exp. CIVIL STATE OF CALIFORNIA

THE STATE OF CALIFORNIA OR ITS OFFICERS OR AGENTS SHALL NOT BE RESPONSIBLE FOR THE ACCURACY OR COMPLETENESS OF SCANNED COPIES OF THIS PLAN SHEET.

NOTE:

FOR ACCURATE RIGHT OF WAY DATA, CONTACT RIGHT OF WAY ENGINEERING AT THE DISTRICT OFFICE.

757L BASELINE INFORMATION ESTABLISHED FOR THIS PROJECT BY THE ENGINEER

(A) Sta 37+86.465
N 6448954.276
E 1809101.821

(B) Sta 32+80.06
N 6448961.527
E 1809320.311

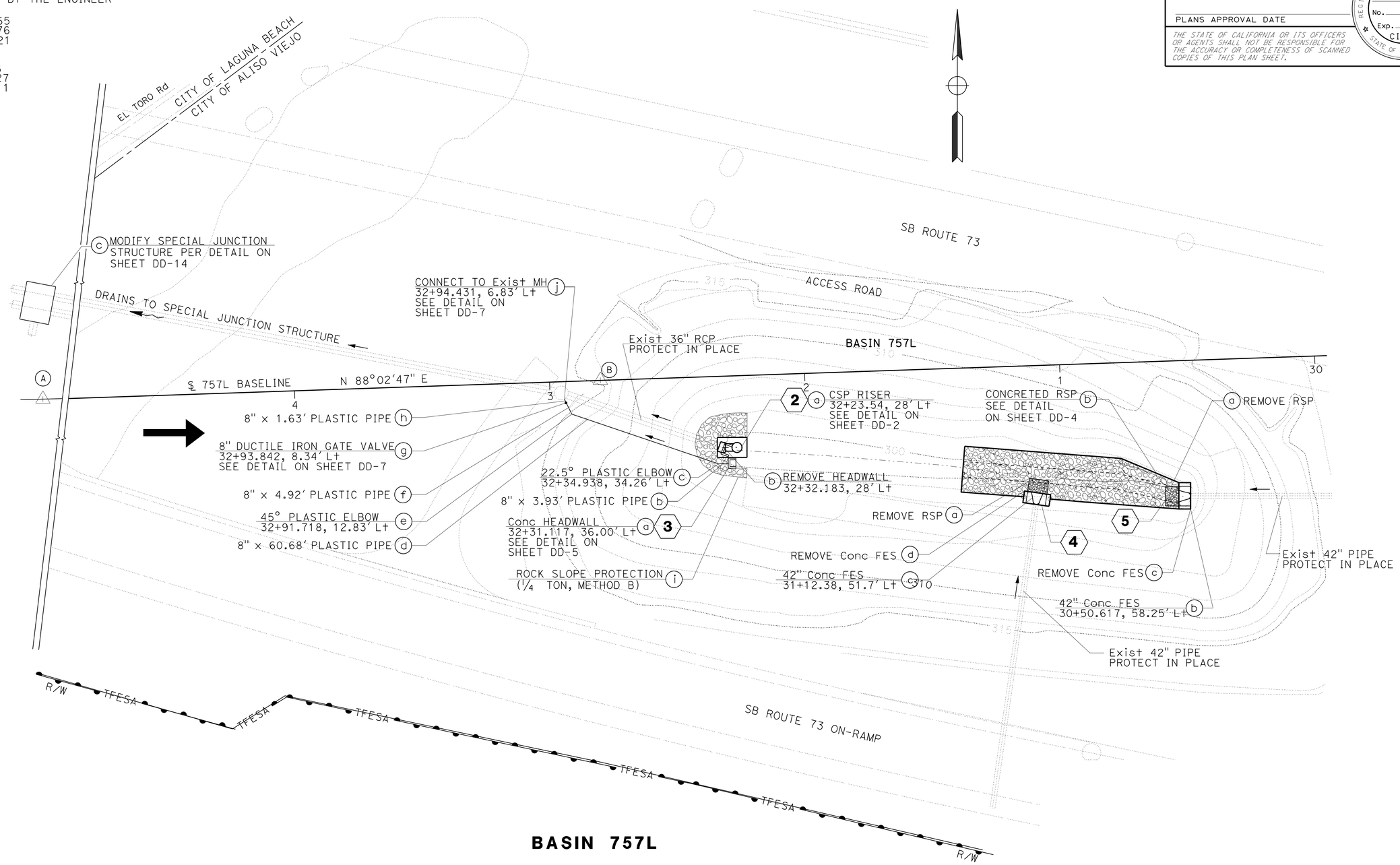

DRAINAGE PLAN

SCALE: 1" = 20'

D-4

APPROVED FOR DRAINAGE WORK ONLY

FIGURE 4-2

STATE OF CALIFORNIA - DEPARTMENT OF TRANSPORTATION

Caltrans

FUNCTIONAL SUPERVISOR

CALCULATED-DESIGNED BY

CHECKED BY

REVISED BY

DATE REVISED

LAST REVISION 00-00-00

DATE PLOTTED => 17-JUN-2013
TIME PLOTTED => 10:21

Dist	COUNTY	ROUTE	POST MILES TOTAL PROJECT	SHEET No.	TOTAL SHEETS

REGISTERED CIVIL ENGINEER DATE

PLANS APPROVAL DATE

REGISTERED PROFESSIONAL ENGINEER No. Exp. CIVIL STATE OF CALIFORNIA

THE STATE OF CALIFORNIA OR ITS OFFICERS OR AGENTS SHALL NOT BE RESPONSIBLE FOR THE ACCURACY OR COMPLETENESS OF SCANNED COPIES OF THIS PLAN SHEET.

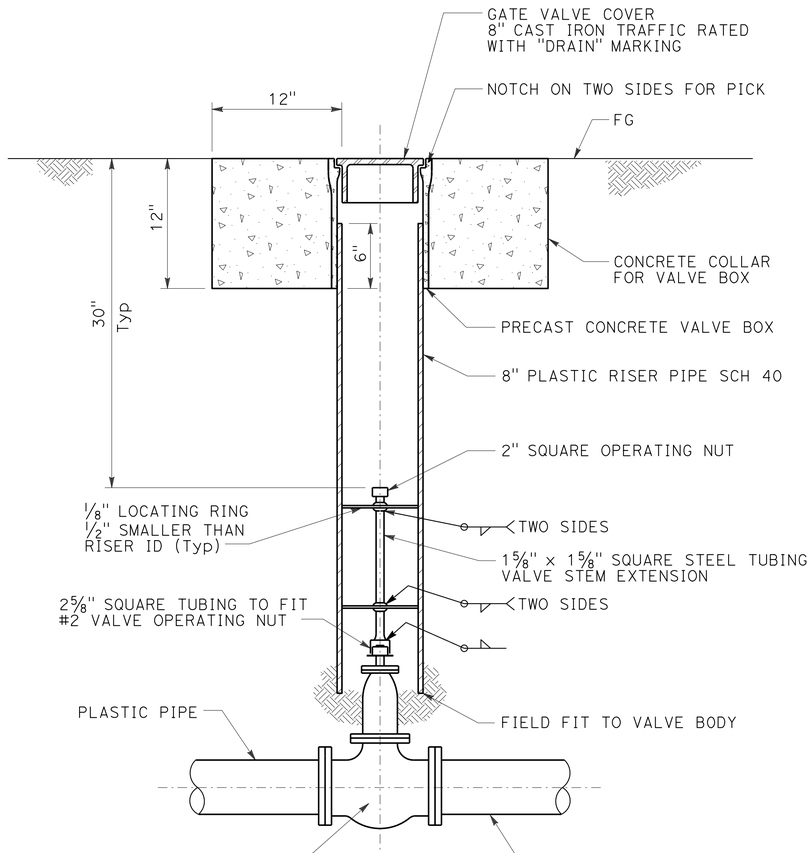

8" DUCTILE IRON GATE VALVE DETAIL

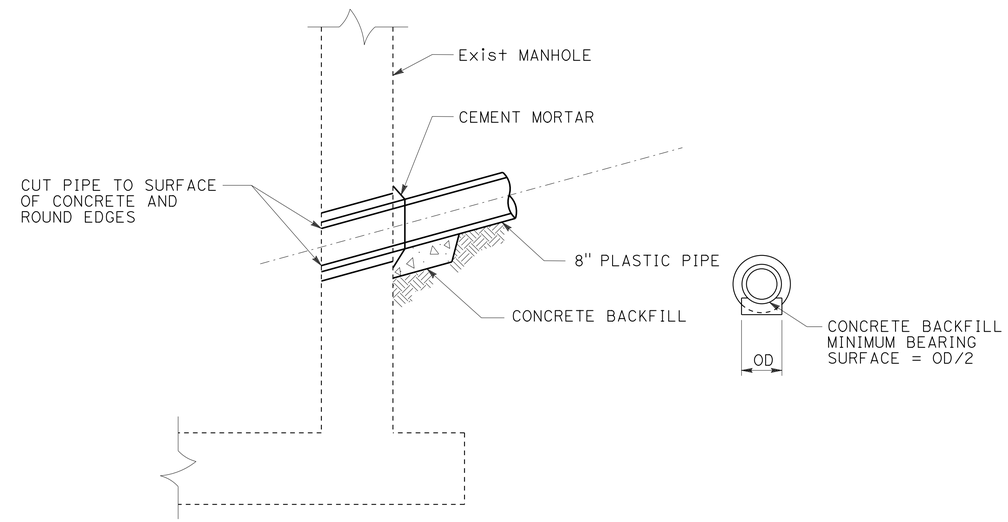

PIPE CONNECTION TO EXISTING MANHOLE

BASIN 757L

DRAINAGE DETAILS

NO SCALE

DD-7

FIGURE 4-3

APPROVED FOR DRAINAGE WORK ONLY

STATE OF CALIFORNIA - DEPARTMENT OF TRANSPORTATION

Caltrans

FUNCTIONAL SUPERVISOR

CALCULATED-DESIGNED BY | CHECKED BY

REVISED BY | DATE REVISED

LAST REVISION 00-00-00 | DATE PLOTTED => 17-JUN-2013 | TIME PLOTTED => 10:21

Dist	COUNTY	ROUTE	POST MILES TOTAL PROJECT	SHEET No.	TOTAL SHEETS

REGISTERED CIVIL ENGINEER DATE

PLANS APPROVAL DATE

REGISTERED PROFESSIONAL ENGINEER No. Exp. CIVIL STATE OF CALIFORNIA

THE STATE OF CALIFORNIA OR ITS OFFICERS OR AGENTS SHALL NOT BE RESPONSIBLE FOR THE ACCURACY OR COMPLETENESS OF SCANNED COPIES OF THIS PLAN SHEET.

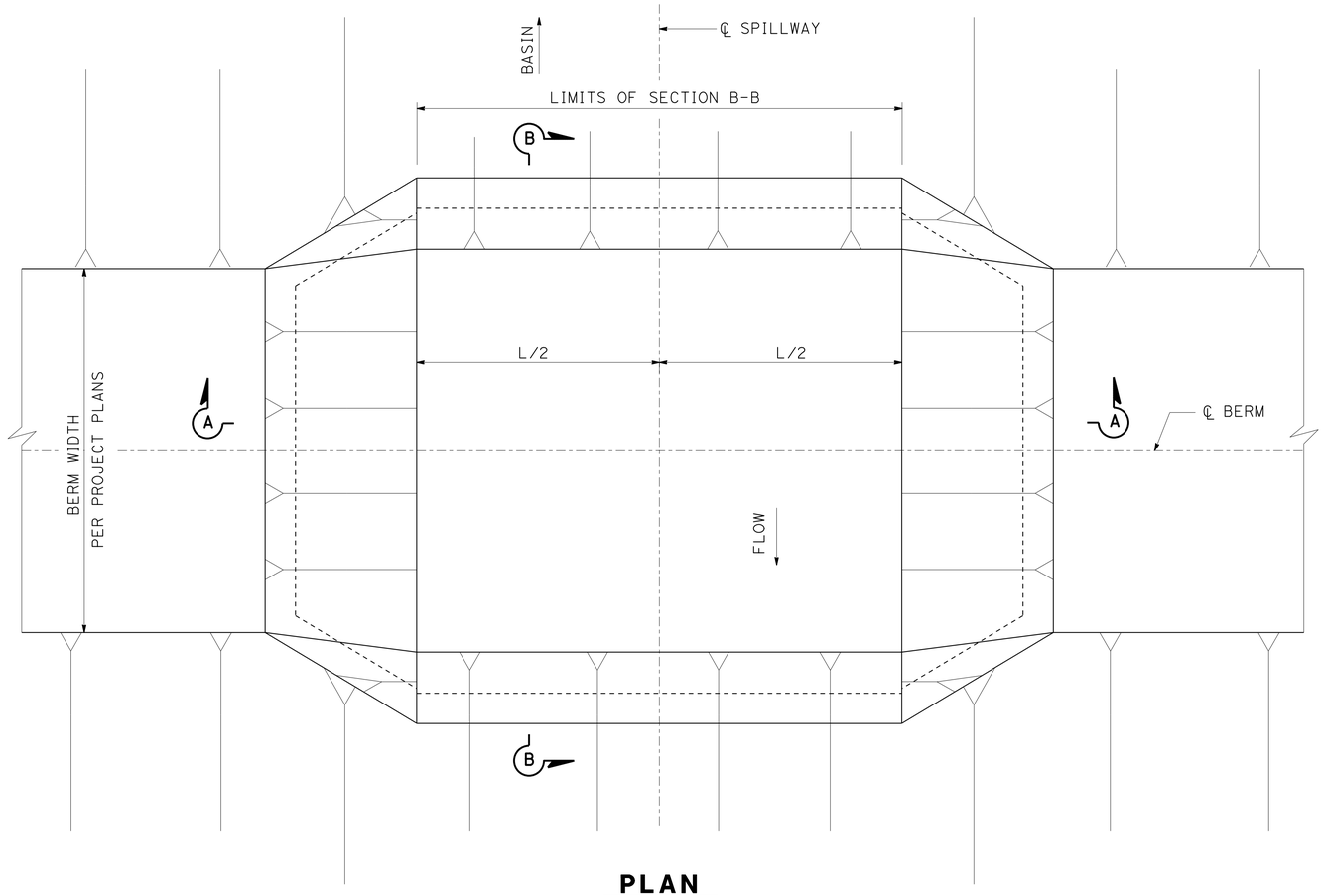

PLAN

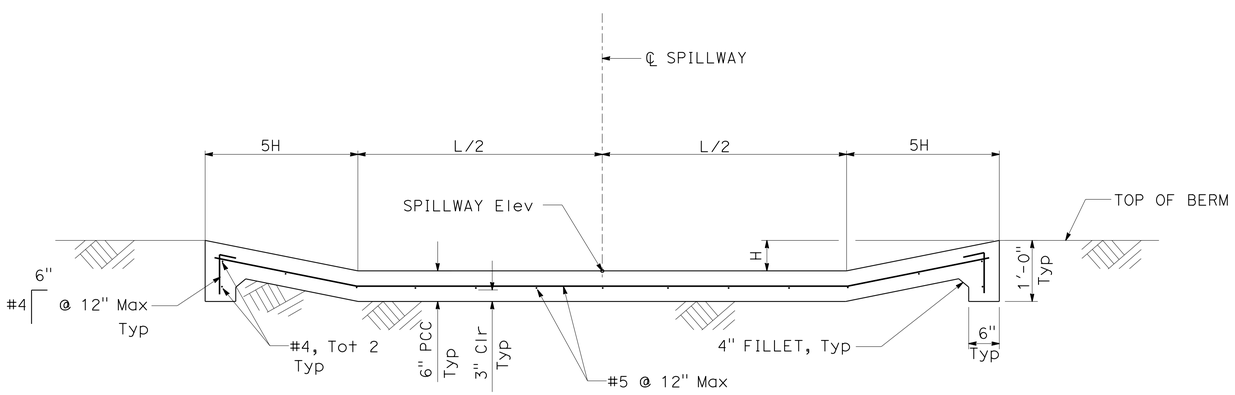

SECTION A-A

DESIGN DATA

REINFORCED CONCRETE:
Minor Concrete
F_y = 60,000 psi

SPILLWAY DIMENSION TABLE

Q Design Flow (cfs)	L (ft)		
	H=1.5'	H=2.0'	H=2.5'
10	11.0'	4.0'	3.0'
15	17.0'	6.0'	4.0'
20	22.0'	8.0'	5.0'
25	27.0'	10.0'	6.0'
30	33.0'	12.0'	7.0'
35	38.0'	14.0'	8.0'
40	44.0'	15.0'	9.0'
45	49.0'	17.0'	10.0'
50	54.0'	19.0'	11.0'
60	65.0'	23.0'	13.0'
70	76.0'	27.0'	15.0'
80	87.0'	30.0'	17.0'
90	98.0'	34.0'	19.0'
100	108.0'	38.0'	21.0'
110	119.0'	42.0'	23.0'
120	130.0'	45.0'	25.0'
130	141.0'	49.0'	27.0'
140	152.0'	53.0'	29.0'
150	162.0'	56.0'	31.0'
175	189.0'	66.0'	36.0'
200	216.0'	75.0'	42.0'
225	243.0'	84.0'	47.0'
250	270.0'	94.0'	52.0'
275	297.0'	103.0'	57.0'
300	324.0'	112.0'	62.0'

NOTE:

"H" IS MEASURED FROM WEIR INVERT TO TOP OF EMBANKMENT.

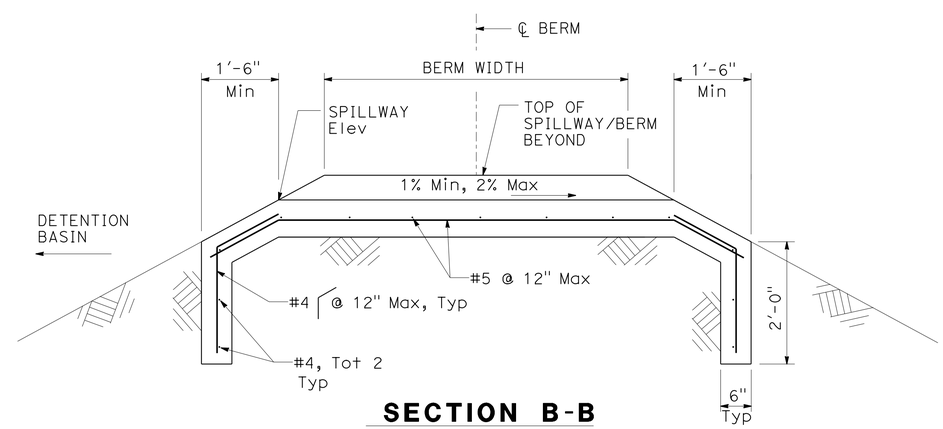

SECTION B-B

OVERFLOW SPILLWAY

DRAINAGE DETAILS

NO SCALE

DD-1

FIGURE 5-2

REVISED BY | DATE REVISED

CALCULATED-DESIGNED BY | CHECKED BY

FUNCTIONAL SUPERVISOR

STATE OF CALIFORNIA - DEPARTMENT OF TRANSPORTATION

Caltrans

LAST REVISION 00-00-00 | DATE PLOTTED => 17-JUN-2013 | TIME PLOTTED => 10:22

Dist	COUNTY	ROUTE	POST MILES TOTAL PROJECT	SHEET No.	TOTAL SHEETS

REGISTERED CIVIL ENGINEER DATE

PLANS APPROVAL DATE

REGISTERED PROFESSIONAL ENGINEER No. Exp. CIVIL STATE OF CALIFORNIA

THE STATE OF CALIFORNIA OR ITS OFFICERS OR AGENTS SHALL NOT BE RESPONSIBLE FOR THE ACCURACY OR COMPLETENESS OF SCANNED COPIES OF THIS PLAN SHEET.

NOTES:

1. FOR ACCURATE RIGHT OF WAY DATA, CONTACT RIGHT OF WAY ENGINEERING AT THE DISTRICT OFFICE.
2. 757L BASELINE INFORMATION ESTABLISHED FOR THE PROJECT BY THE ENGINEER.
   - (A) Sta 37+86.465 N 6448954.276 E 1809101.821
   - (B) Sta 32+80.06 N 6448961.527 E 1809320.311

LEGEND

ACCESS/MAINTENANCE ROAD Cl 2 AB (600 SQYD) (SEE DETAIL ON SHEET C-1)

CONCRETE DRIVEWAY (175 SQYD) (SEE DETAIL ON SHEET C-1)

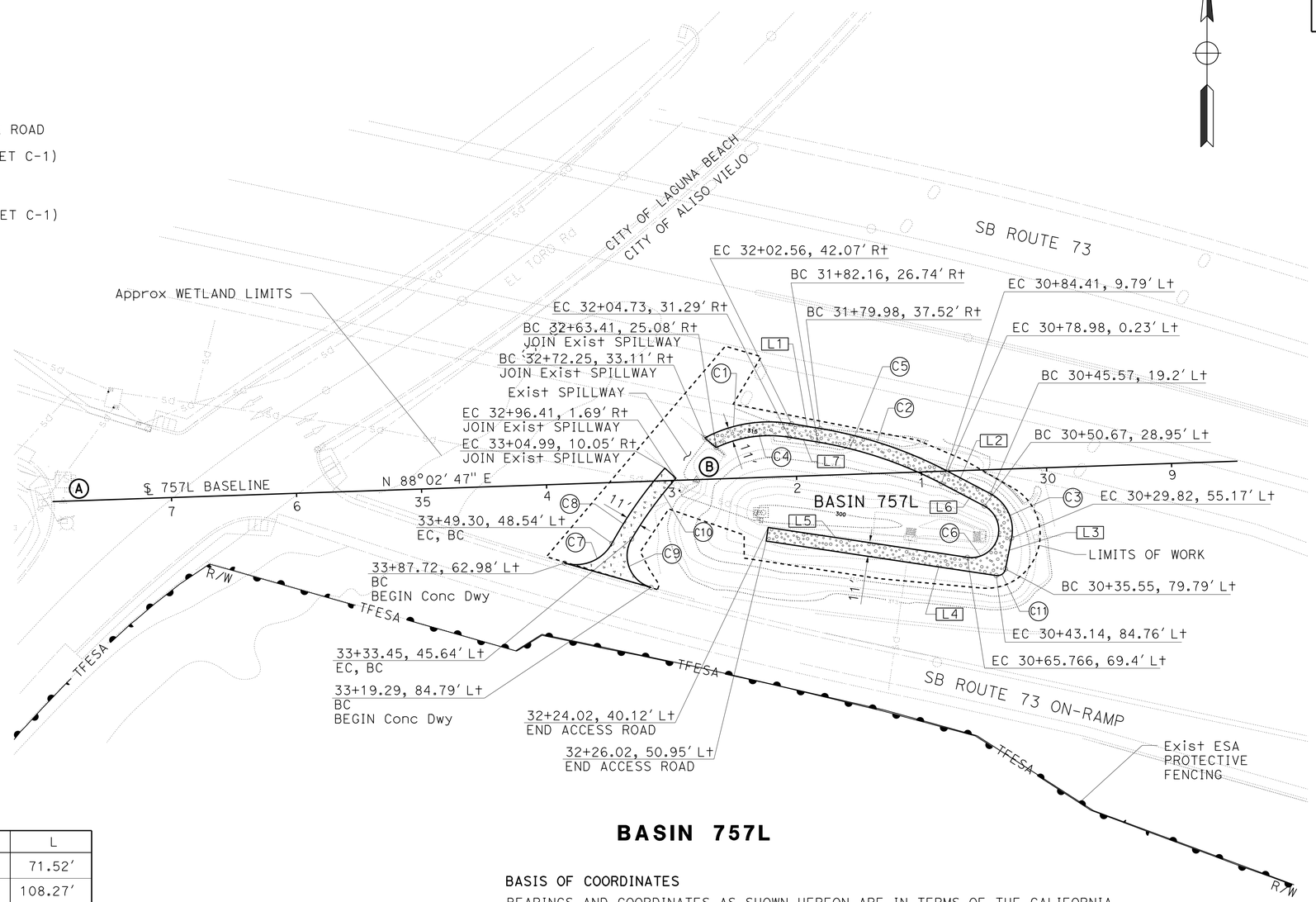

BASIN 757L

CURVE DATA

No.	R	Δ	T	L
C1	109.41'	37°27'30"	37.10'	71.52'
C2	341.21'	18°10'54"	54.59'	108.27'
C3	32.81'	73°31'09"	24.50'	42.09'
C4	196.85'	34°53'18"	30.94'	59.94'
C5	330.22'	18°10'54"	52.85'	104.79'
C6	21.92'	160°01'08"	124.44'	61.22'
C7	32.81'	77°26'20"	26.64'	44.36'
C8	328.08'	12°51'19"	36.97'	73.62'
C9	26.25'	104°57'35"	34.19'	48.06'
C10	316.11'	10°54'38"	30.18'	60.20'
C11	6.56'	87°22'33"	6.27'	10.00'

LINE TABLE

LINE	LENGTH	BEARING
L1	23.03'	S 80°33'02" E
L2	38.42'	S 62°22'07" E
L3	25.29'	N 11°09'01" E
L4	185.99'	S 81°28'26" E
L5	160.94'	N 81°28'26" W
L6	38.80'	S 62°22'14" E
L7	23.03'	N 80°33'02" W

BASIS OF COORDINATES

BEARINGS AND COORDINATES AS SHOWN HEREON ARE IN TERMS OF THE CALIFORNIA COORDINATE SYSTEM OF 1983 (EPOCH 1991.35), BASED LOCALLY UPON THE FOLLOWING CALTRANS STATIONS AS PUBLISHED BY CALTRANS:

NAME	NORTHING	EASTING	ELLIPSE HEIGHT	ACCURACY
2022	663451.494	1852608.461	94.55'	
2023	663535.968	1852514.912	73.47'	
1505	658558.8908	1860300.544	152.38'	

BENCHMARK

ELEVATIONS AS SHOWN HEREON ARE IN TERMS OF THE NATIONAL GEODETIC VERTICAL DATUM OF 1929 BASED LOCALLY UPON THE FOLLOWING CALTRANS BENCH MARKS:

NAME	NGVD 29	Elev	ACCURACY
2022		208.90'	
2023		187.84'	
1505		265.89'	

LAYOUT

SCALE: 1" = 50'

L-3

FIGURE 5-3

REVISED BY | DATE REVISED | CALCULATED-DESIGNED BY | CHECKED BY | FUNCTIONAL SUPERVISOR

STATE OF CALIFORNIA - DEPARTMENT OF TRANSPORTATION

Caltrans

LAST REVISION 00-00-00 | DATE PLOTTED => 17-JUN-2013 | TIME PLOTTED => 10:22

Dist	COUNTY	ROUTE	POST MILES TOTAL PROJECT	SHEET No.	TOTAL SHEETS

REGISTERED CIVIL ENGINEER DATE

PLANS APPROVAL DATE

REGISTERED PROFESSIONAL ENGINEER No. Exp. CIVIL STATE OF CALIFORNIA

THE STATE OF CALIFORNIA OR ITS OFFICERS OR AGENTS SHALL NOT BE RESPONSIBLE FOR THE ACCURACY OR COMPLETENESS OF SCANNED COPIES OF THIS PLAN SHEET.

NOTE:

FOR ACCURATE RIGHT OF WAY DATA, CONTACT RIGHT OF WAY ENGINEERING AT THE DISTRICT OFFICE.

LEGEND

LIMITS OF DISTURBED SOIL

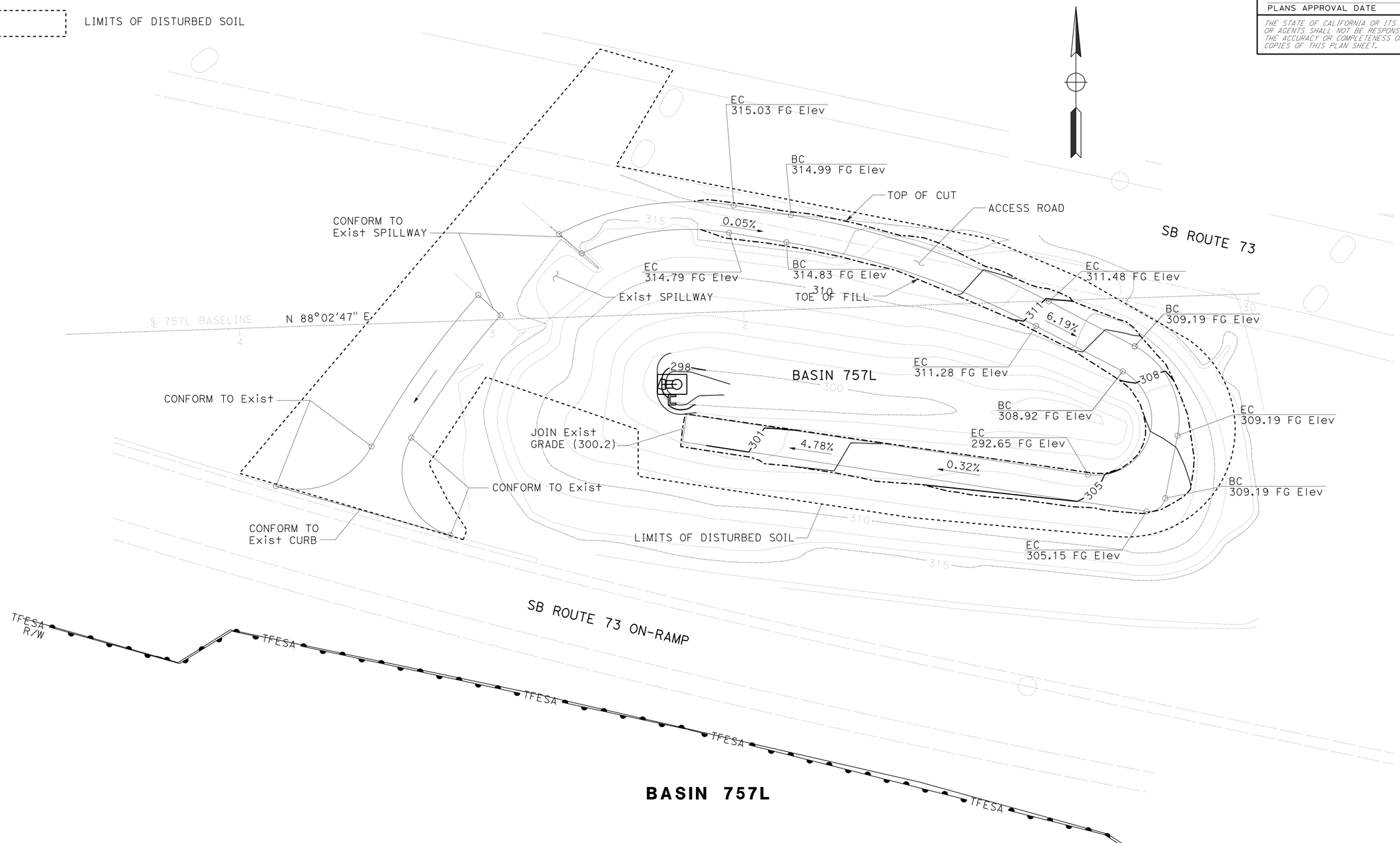

BASIN 757L

CONTOUR GRADING

SCALE: 1" = 20'

G-3

APPROVED FOR CONTOUR GRADING WORK ONLY

FIGURE 5-4

STATE OF CALIFORNIA - DEPARTMENT OF TRANSPORTATION

Caltrans

FUNCTIONAL SUPERVISOR

CALCULATED-DESIGNED BY

CHECKED BY

REVISED BY

DATE REVISED

LAST REVISION 00-00-00 | DATE PLOTTED => 17-JUN-2013 | TIME PLOTTED => 10:22

Dist	COUNTY	ROUTE	POST MILES TOTAL PROJECT	SHEET No.	TOTAL SHEETS

REGISTERED CIVIL ENGINEER DATE

PLANS APPROVAL DATE

REGISTERED PROFESSIONAL ENGINEER No. Exp. CIVIL STATE OF CALIFORNIA

THE STATE OF CALIFORNIA OR ITS OFFICERS OR AGENTS SHALL NOT BE RESPONSIBLE FOR THE ACCURACY OR COMPLETENESS OF SCANNED COPIES OF THIS PLAN SHEET.

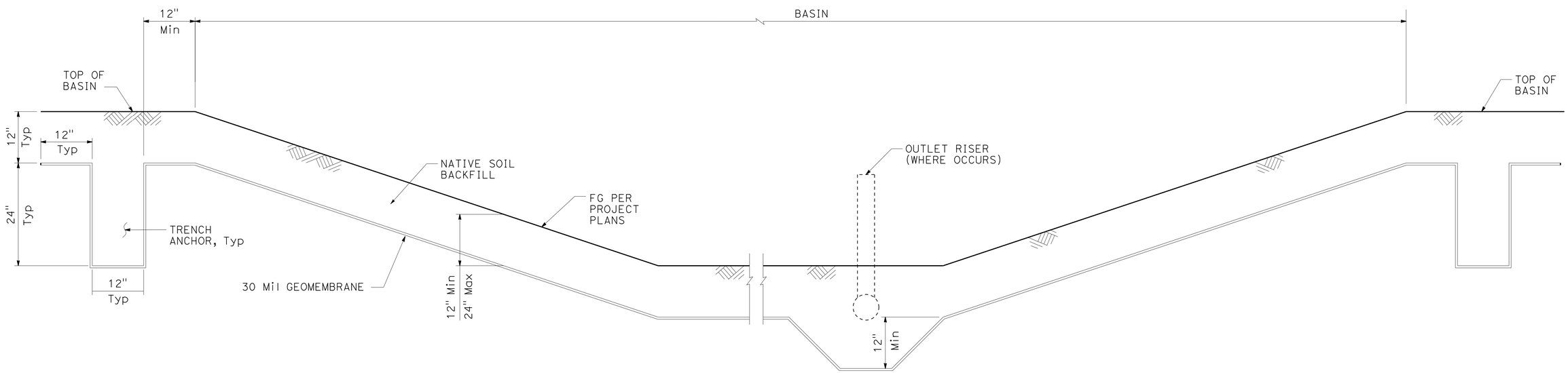

GEOMEMBRANE LINER

GEOMEMBRANE LINER

NO SCALE

FIGURE 6-1

REVISED BY | DATE REVISED

CALCULATED-DESIGNED BY | CHECKED BY

FUNCTIONAL SUPERVISOR

STATE OF CALIFORNIA - DEPARTMENT OF TRANSPORTATION

Caltrans

LAST REVISION 00-00-00 | DATE PLOTTED => 17-JUN-2013 | TIME PLOTTED => 10:22

Dist	COUNTY	ROUTE	POST MILES TOTAL PROJECT	SHEET No.	TOTAL SHEETS

REGISTERED CIVIL ENGINEER DATE

PLANS APPROVAL DATE

REGISTERED PROFESSIONAL ENGINEER No. Exp. CIVIL STATE OF CALIFORNIA

THE STATE OF CALIFORNIA OR ITS OFFICERS OR AGENTS SHALL NOT BE RESPONSIBLE FOR THE ACCURACY OR COMPLETENESS OF SCANNED COPIES OF THIS PLAN SHEET.

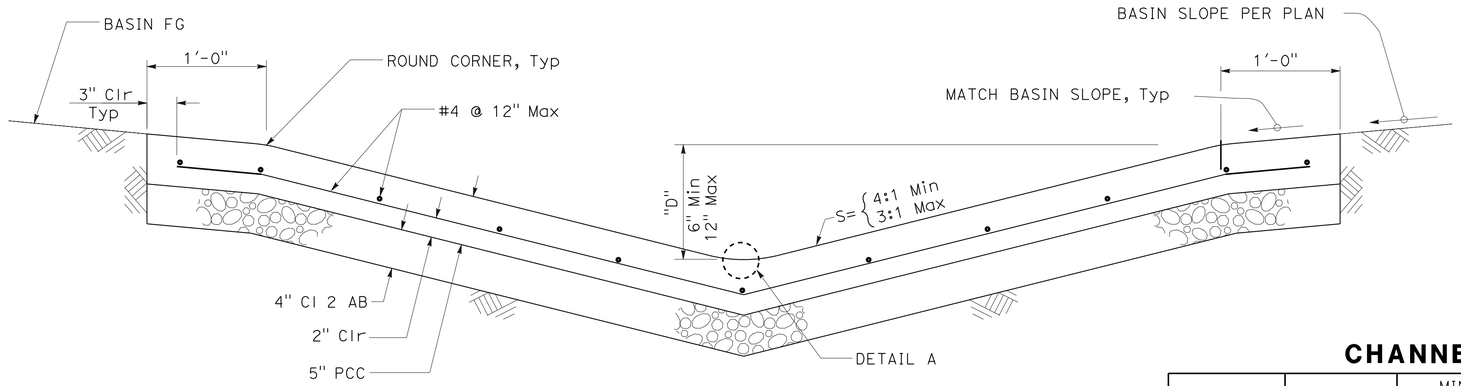

CHANNEL TYPE A

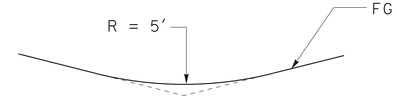

DETAIL A

NOTES:

1. All RPL members to be solid.
2. All bolts and hardware must be galvanized.

CHANNEL TYPE A

DEPTH "D"	SIDE SLOPE	MINOR CONCRETE (LOW FLOW CHANNEL)	Cl 2 AB
		CY/LF	CY/LF
6"	3:1	0.08	0.07
	4:1	0.10	0.08
12"	3:1	0.13	0.10
	4:1	0.16	0.13

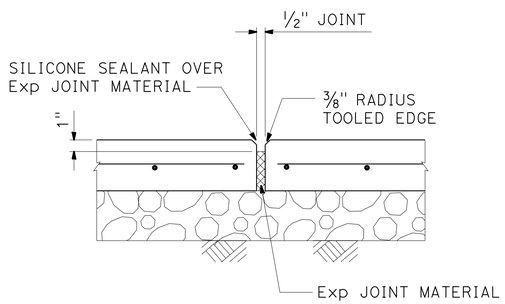

EXPANSION JOINT DETAIL

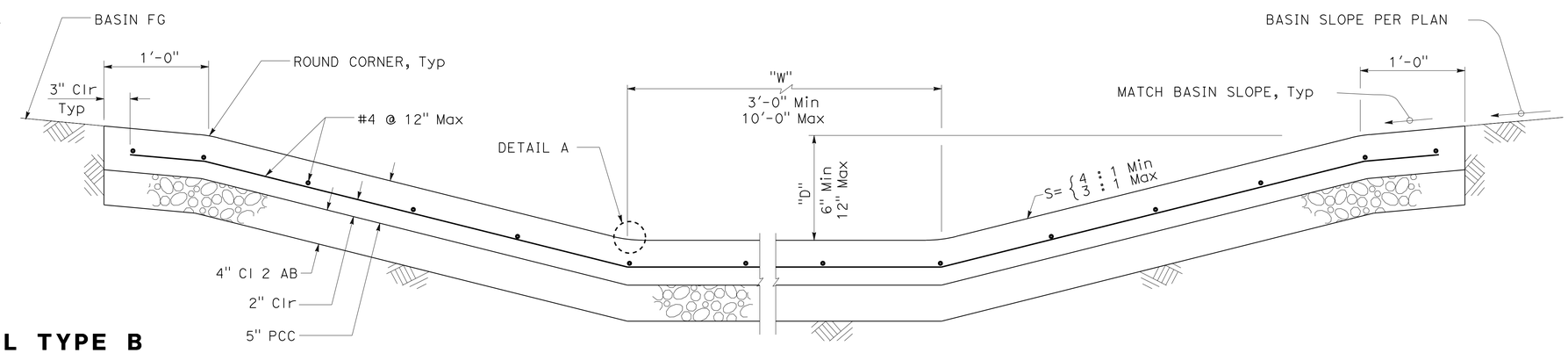

CHANNEL TYPE B

CHANNEL TYPE B

DEPTH "D"	SIDE SLOPE	CHANNEL WIDTH "W"							
		3'-0"	4'-0"	5'-0"	6'-0"	7'-0"	8'-0"	9'-0"	10'-0"
		MINOR CONCRETE (LOW FLOW CHANNEL) (CY/LF) / CLASS 2 AB (CY/LF)							
6"	3:1	0.13 / 0.10	0.15 / 0.12	0.16 / 0.13	0.18 / 0.14	0.20 / 0.16	0.21 / 0.17	0.23 / 0.18	0.25 / 0.20
	4:1	0.15 / 0.12	0.16 / 0.13	0.18 / 0.14	0.19 / 0.15	0.21 / 0.17	0.22 / 0.18	0.24 / 0.19	0.26 / 0.21
12"	3:1	0.18 / 0.15	0.20 / 0.16	0.21 / 0.17	0.23 / 0.18	0.25 / 0.20	0.26 / 0.21	0.28 / 0.22	0.29 / 0.24
	4:1	0.21 / 0.17	0.22 / 0.18	0.24 / 0.19	0.26 / 0.20	0.27 / 0.22	0.29 / 0.23	0.30 / 0.24	0.32 / 0.26

DESIGN DATA

REINFORCED CONCRETE:
MINOR CONCRETE
F_y = 60,000 psi

LOW FLOW CHANNEL

NO SCALE

FIGURE 7-1

REVISED BY | DATE REVISED

CALCULATED-DESIGNED BY | CHECKED BY

FUNCTIONAL SUPERVISOR

STATE OF CALIFORNIA - DEPARTMENT OF TRANSPORTATION

Caltrans

LAST REVISION 00-00-00 | DATE PLOTTED => 17-JUN-2013 | TIME PLOTTED => 10:22

Dist	COUNTY	ROUTE	POST MILE	SHEET	TOTAL SHEETS

REGISTERED CIVIL ENGINEER DATE

PLANS APPROVAL DATE

No. Exp. CIVIL

THE STATE OF CALIFORNIA, ITS OFFICERS OR AGENTS SHALL NOT BE RESPONSIBLE FOR THE ACCURACY OR COMPLETENESS OF SCANNED COPIES OF THIS PLAN SHEET.

QUANTITIES

MINOR CONCRETE (OVERFLOW RISER) 5.1 CY
12" CSP (0.079" THICK) 3.5 LF

MISCELLANEOUS METAL (OVERFLOW RISER):
LADDER 10 LB/LF
DEBRIS RACK CAGE 204 LB
ANCHOR BOLTS 9 LB

DESIGN DATA

REINFORCED CONCRETE:
MINOR CONCRETE Fy = 60,000 PSI

NOTE:

1. Seal bolt holes and coat connection steel with asphalt mastic (ASTM A491). Trowel asphalt mastic a minimum of ½" thick on and around connection steel. Use mastic to fill corrugations behind washer plates.

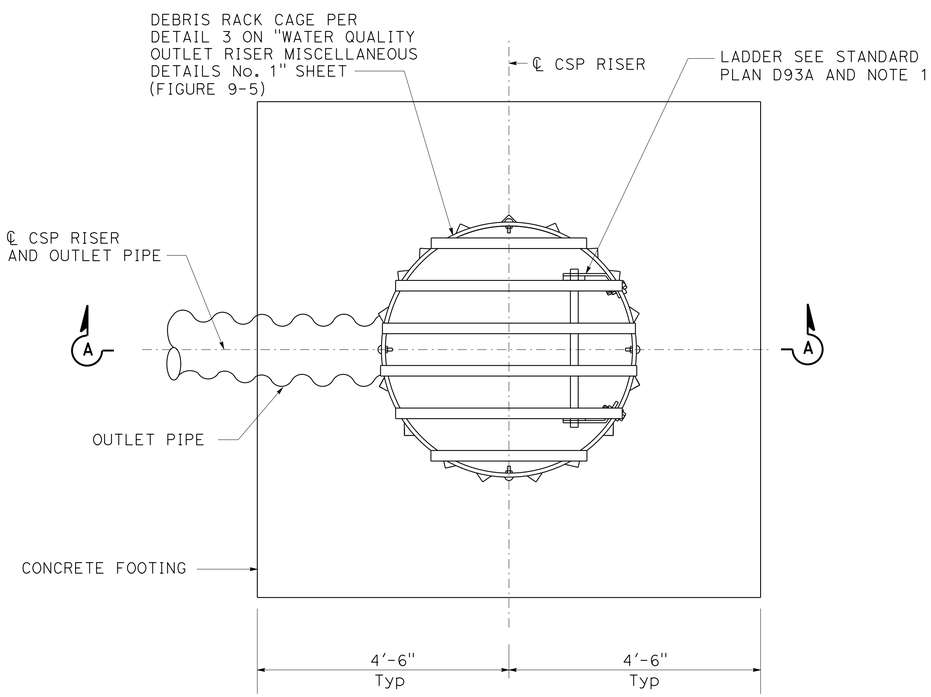

PLAN

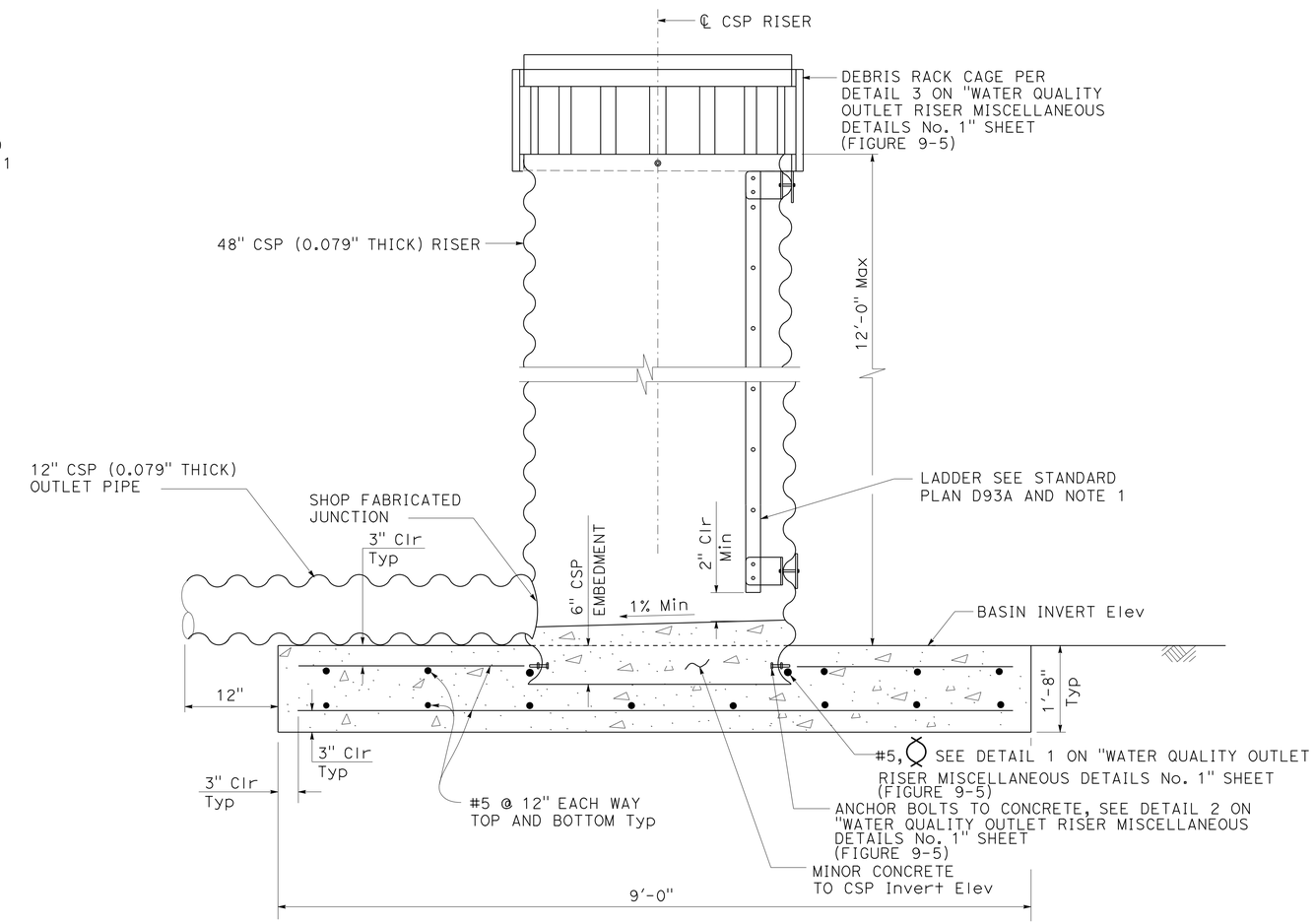

SECTION A-A

OVERFLOW RISER (TYPE 1)

DRAINAGE DETAILS

NO SCALE

DD-2

FIGURE 8-2

REVISED BY | DATE REVISED | CHECKED BY | DESIGNED BY | CALCULATED-BY | SUPERVISOR

STATE OF CALIFORNIA - DEPARTMENT OF TRANSPORTATION

Caltrans

LAST REGISTERED PROFESSIONAL ENGINEER 2013
00-00-00TIME PLOTTED <>

Dist	COUNTY	ROUTE	POST MILES TOTAL PROJECT	SHEET No.	TOTAL SHEETS

REGISTERED CIVIL ENGINEER DATE

PLANS APPROVAL DATE

REGISTERED PROFESSIONAL ENGINEER No. Exp. CIVIL STATE OF CALIFORNIA

THE STATE OF CALIFORNIA OR ITS OFFICERS OR AGENTS SHALL NOT BE RESPONSIBLE FOR THE ACCURACY OR COMPLETENESS OF SCANNED COPIES OF THIS PLAN SHEET.

QUANTITIES

MINOR CONCRETE (OVERFLOW RISER):

BASIN SLAB	4.2 CY
CSP ENCASEMENT	0.46 CY/LF
FOOTING	3.3 CY

12" CSP (0.079" THICK)

MISCELLANEOUS METAL:

LADDER	10 LB/LF
DEBRIS RACK CAGE	204 LB
ANCHOR BOLTS	27 LB

DESIGN DATA

REINFORCED CONCRETE:
MINOR CONCRETE Fy= 60,000 PSI

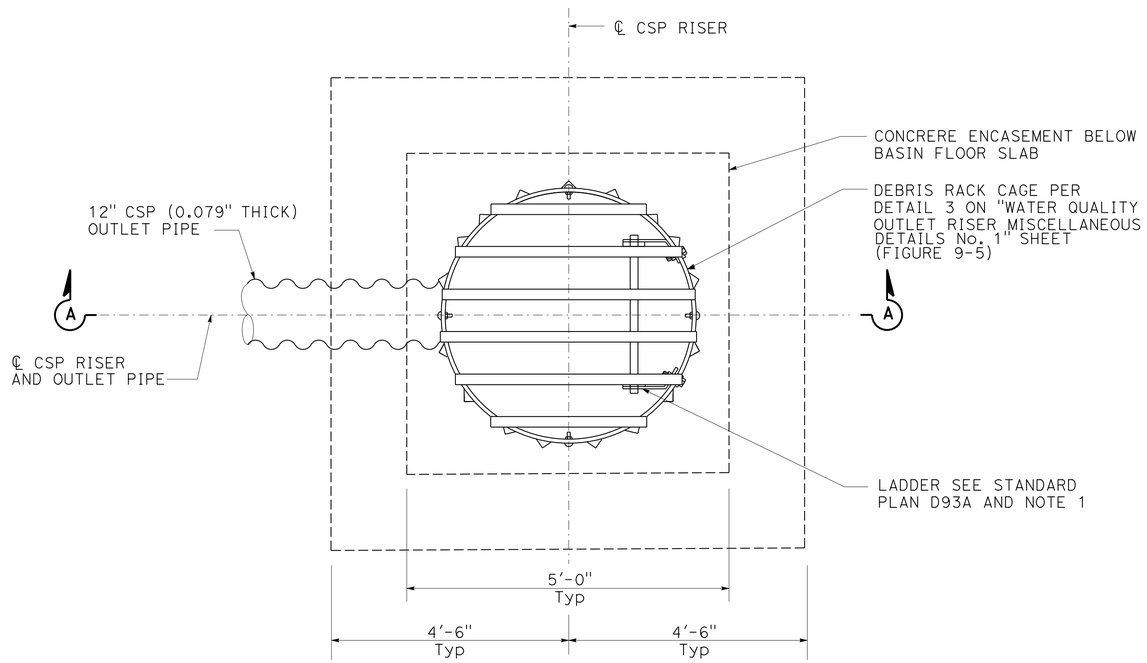

PLAN

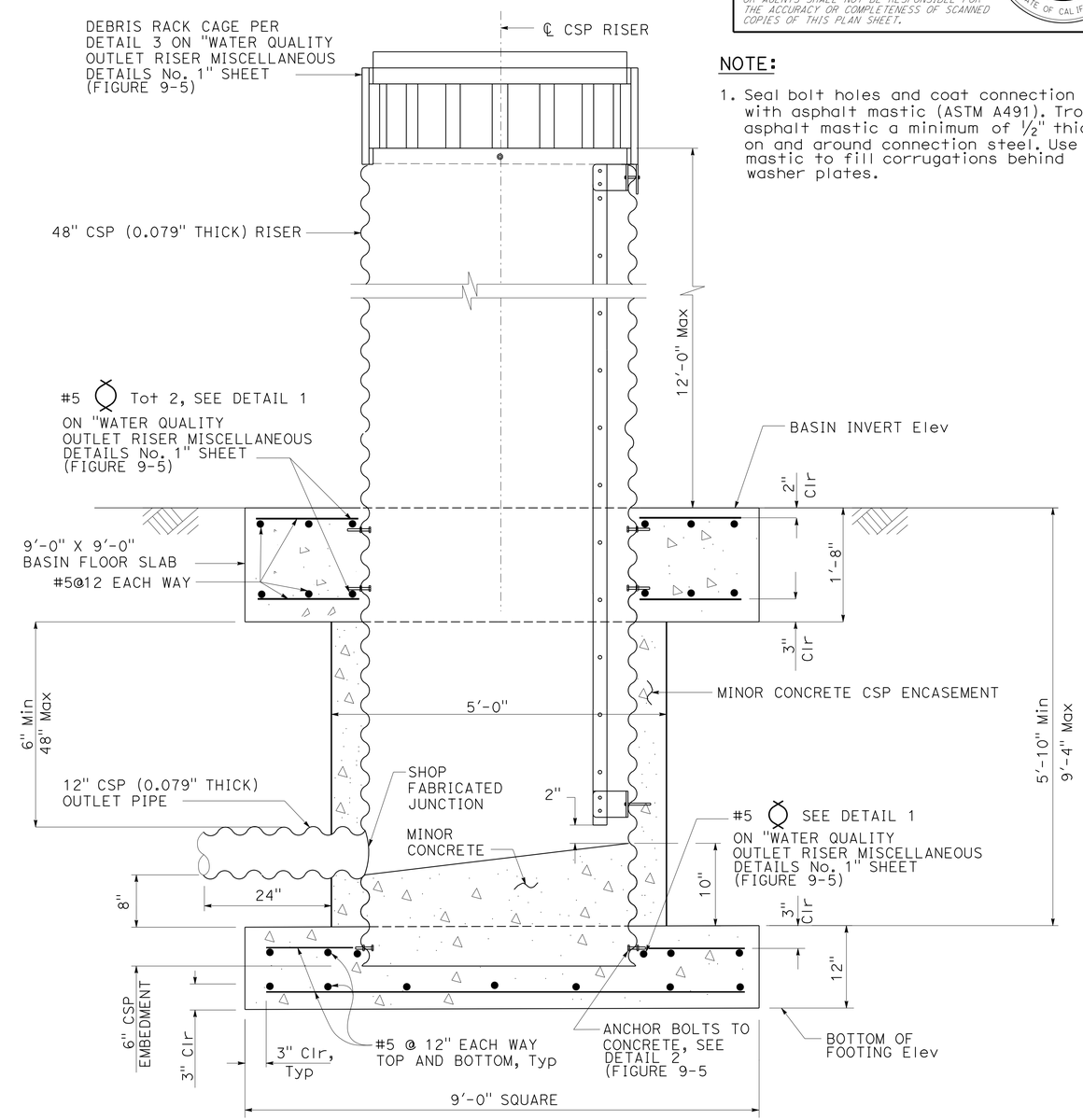

SECTION A-A

NOTE:

1. Seal bolt holes and coat connection steel with asphalt mastic (ASTM A491). Trowel asphalt mastic a minimum of ½" thick on and around connection steel. Use mastic to fill corrugations behind washer plates.

OVERFLOW RISER (TYPE 2)

DRAINAGE DETAILS

NO SCALE **DD-3**

FIGURE 8-3

REVISED BY | DATE REVISED | CALCULATED-DESIGNED BY | CHECKED BY | FUNCTIONAL SUPERVISOR

STATE OF CALIFORNIA - DEPARTMENT OF TRANSPORTATION

Caltrans

LAST REVISION 00-00-00 | DATE PLOTTED => 17-JUN-2013 | TIME PLOTTED => 10:22

Dist	COUNTY	ROUTE	POST MILES TOTAL PROJECT	SHEET No.	TOTAL SHEETS

REGISTERED CIVIL ENGINEER DATE

PLANS APPROVAL DATE

REGISTERED PROFESSIONAL ENGINEER No. Exp. CIVIL STATE OF CALIFORNIA

THE STATE OF CALIFORNIA OR ITS OFFICERS OR AGENTS SHALL NOT BE RESPONSIBLE FOR THE ACCURACY OR COMPLETENESS OF SCANNED COPIES OF THIS PLAN SHEET.

NOTE:

FOR ACCURATE RIGHT OF WAY DATA, CONTACT RIGHT OF WAY ENGINEERING AT THE DISTRICT OFFICE.

757L BASELINE INFORMATION ESTABLISHED FOR THIS PROJECT BY THE ENGINEER

(A) Sta 37+86.465
N 6448954.276
E 1809101.821

(B) Sta 32+80.06
N 6448961.527
E 1809320.311

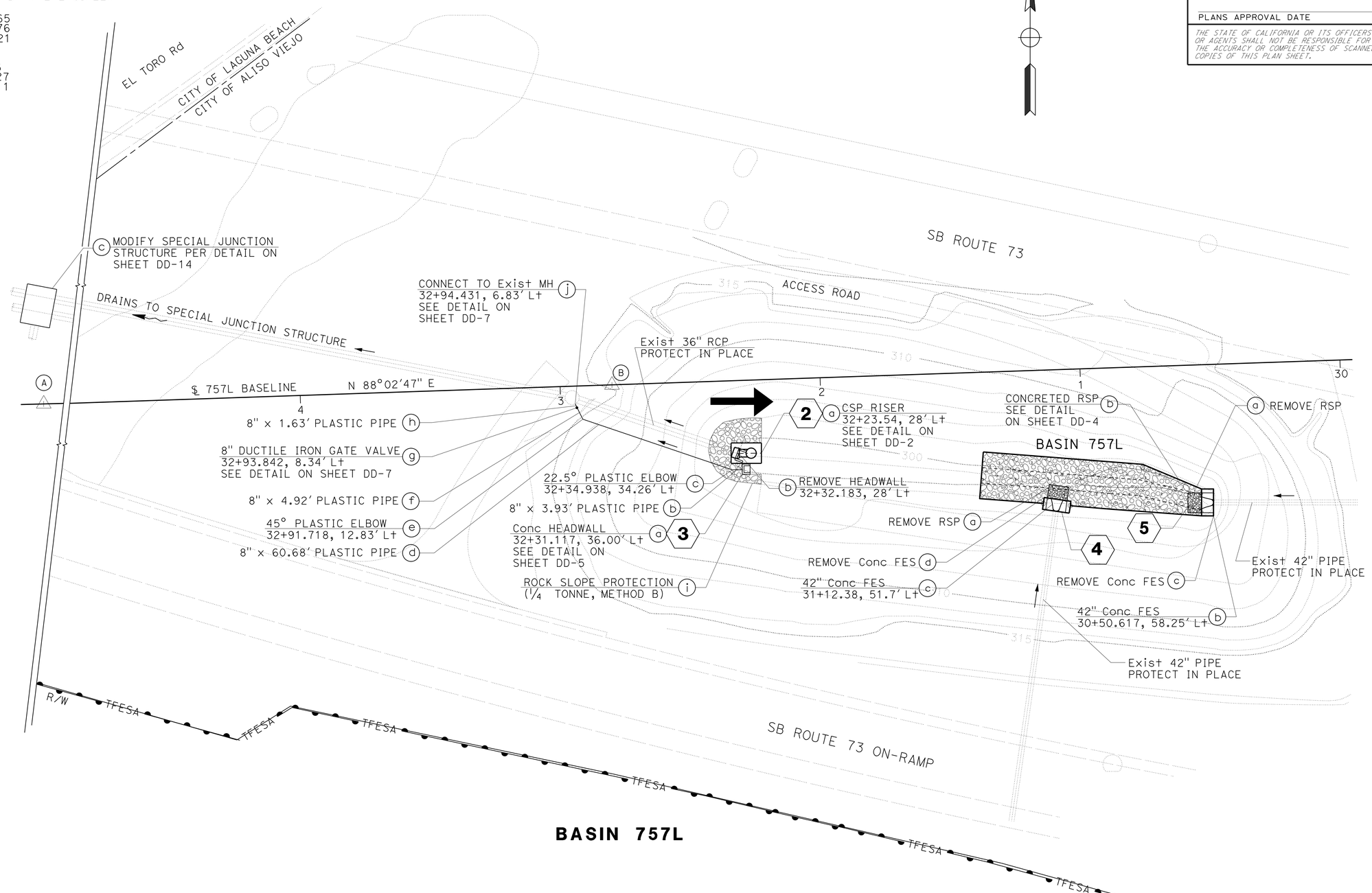

DRAINAGE PLAN

SCALE: 1" = 20'

D-4

FIGURE 8-4

APPROVED FOR DRAINAGE WORK ONLY

STATE OF CALIFORNIA - DEPARTMENT OF TRANSPORTATION

Caltrans

FUNCTIONAL SUPERVISOR

CALCULATED-DESIGNED BY

CHECKED BY

REVISED BY

DATE REVISED

LAST REVISION 00-00-00

DATE PLOTTED => 17-JUN-2013

TIME PLOTTED => 10:22

Dist	COUNTY	ROUTE	POST MILES TOTAL PROJECT	SHEET No.	TOTAL SHEETS

REGISTERED CIVIL ENGINEER DATE

PLANS APPROVAL DATE

REGISTERED PROFESSIONAL ENGINEER No. Exp. CIVIL STATE OF CALIFORNIA

THE STATE OF CALIFORNIA OR ITS OFFICERS OR AGENTS SHALL NOT BE RESPONSIBLE FOR THE ACCURACY OR COMPLETENESS OF SCANNED COPIES OF THIS PLAN SHEET.

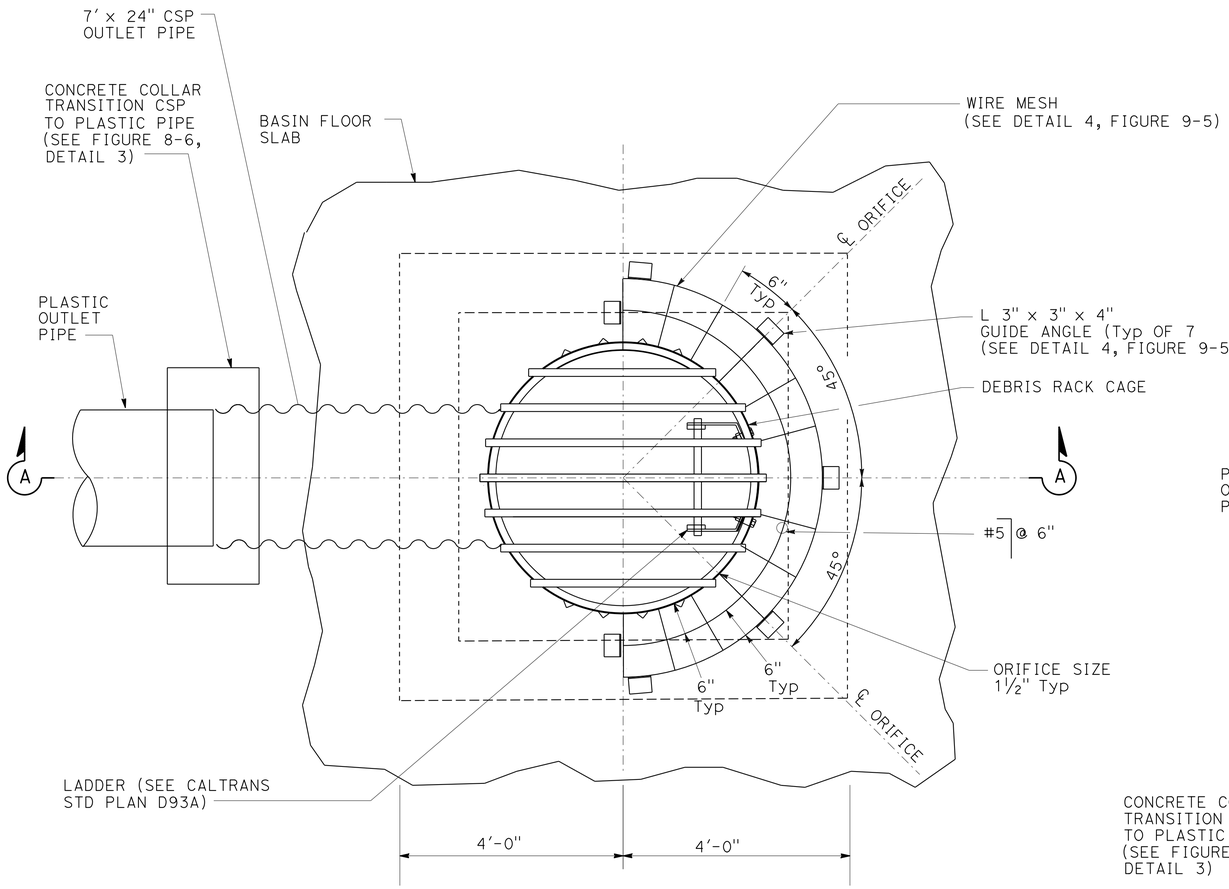

PLAN

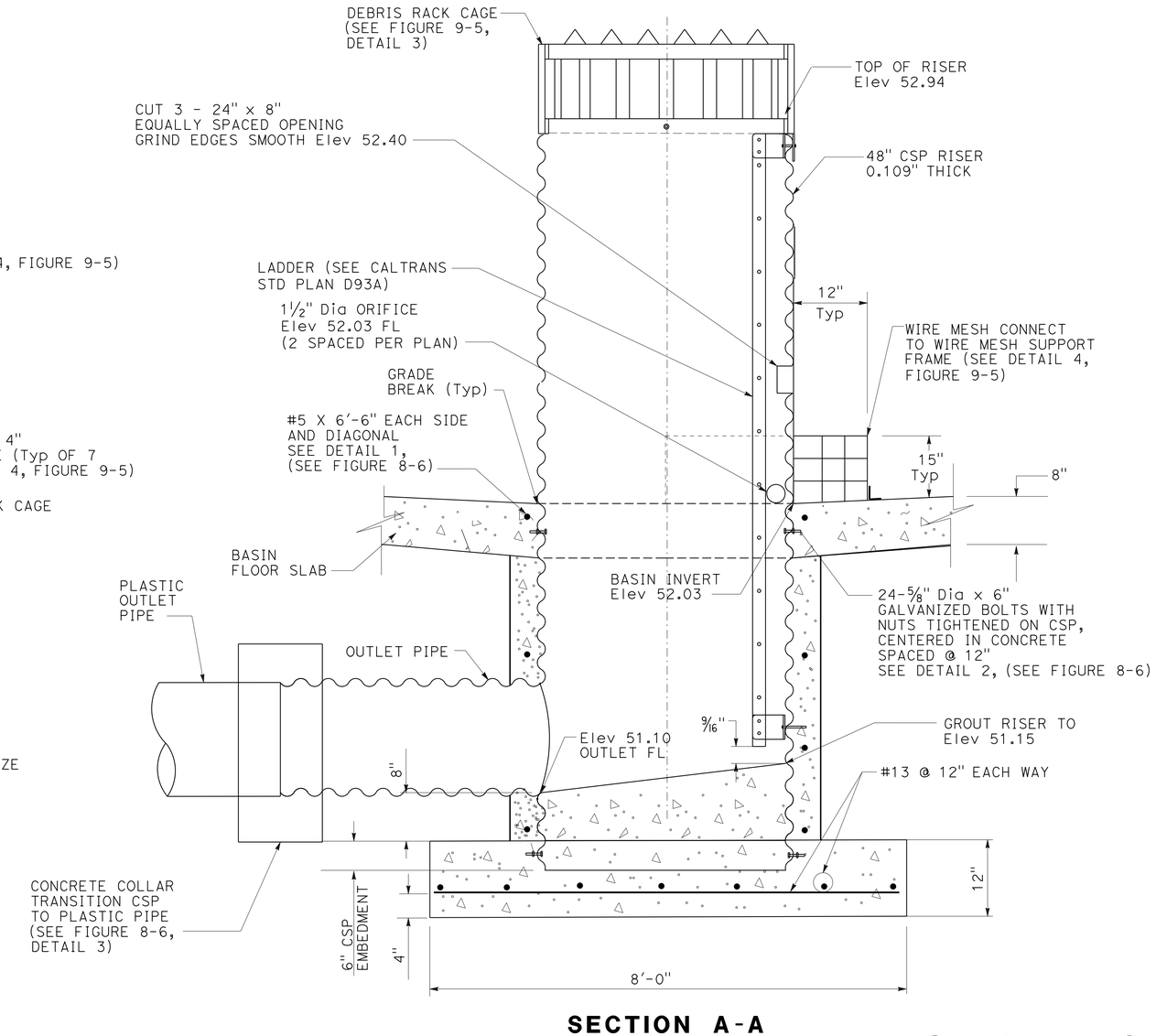

SECTION A-A

BASIN 1080R
CORRUGATED STEEL PIPE RISER
DRAINAGE SYSTEM No. 1-1 C

DRAINAGE DETAILS

NO SCALE

DD-1

FIGURE 8-5

STATE OF CALIFORNIA - DEPARTMENT OF TRANSPORTATION

Caltrans

FUNCTIONAL SUPERVISOR

CALCULATED-DESIGNED BY | CHECKED BY

REVISED BY | DATE REVISED

LAST REVISION 00-00-00 | DATE PLOTTED => 17-JUN-2013 | TIME PLOTTED => 10:22

Dist	COUNTY	ROUTE	POST MILES TOTAL PROJECT	SHEET No.	TOTAL SHEETS

REGISTERED CIVIL ENGINEER DATE

PLANS APPROVAL DATE

REGISTERED PROFESSIONAL ENGINEER No. Exp. CIVIL STATE OF CALIFORNIA

THE STATE OF CALIFORNIA OR ITS OFFICERS OR AGENTS SHALL NOT BE RESPONSIBLE FOR THE ACCURACY OR COMPLETENESS OF SCANNED COPIES OF THIS PLAN SHEET.

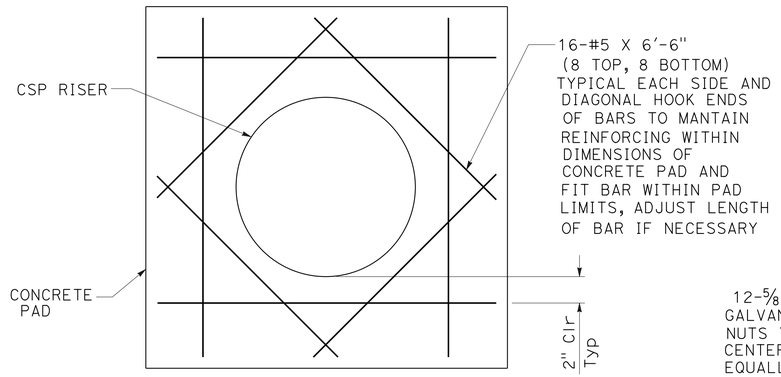

DETAIL 1
TYPICAL OPENING REINFORCING

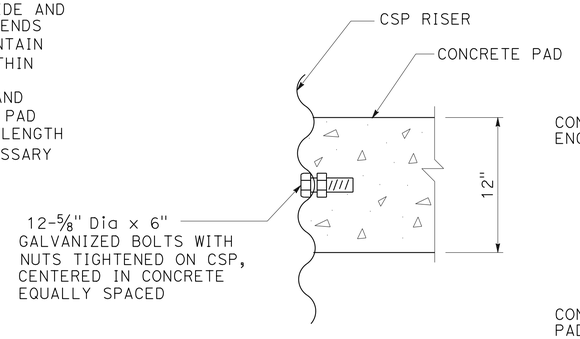

DETAIL 2
CSP TO CONCRETE

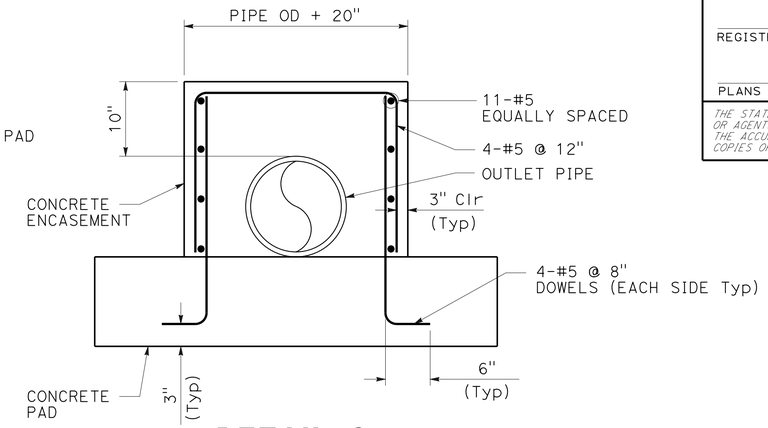

DETAIL 3
CONCRETE COLLAR

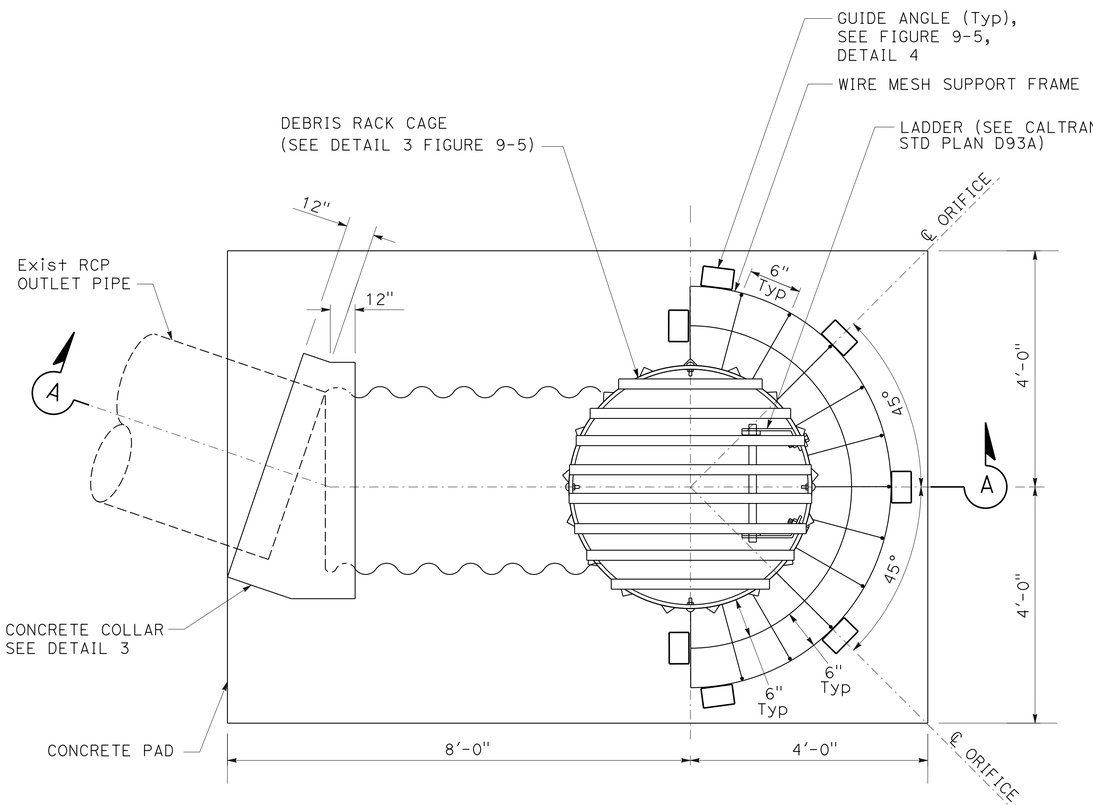

CSP RISER PLAN

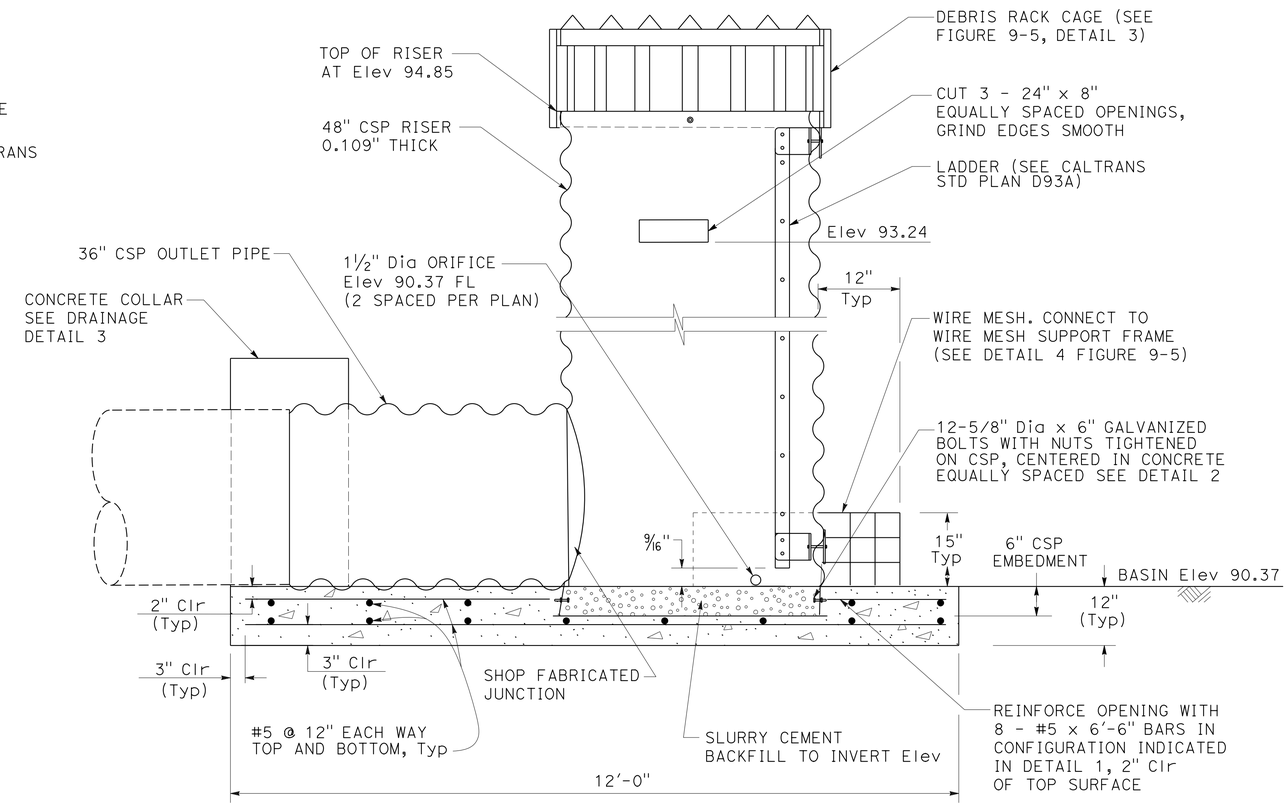

SECTION A-A

DRAINAGE SYSTEM No. 2 a

DRAINAGE DETAILS
(BASIN 757L)

NO SCALE **DD-2**

FIGURE 8-6

REVISED BY | DATE REVISED | CALCULATED-DESIGNED BY | CHECKED BY | FUNCTIONAL SUPERVISOR

STATE OF CALIFORNIA - DEPARTMENT OF TRANSPORTATION

Caltrans

LAST REVISION 00-00-00 | DATE PLOTTED => 17-JUN-2013 | TIME PLOTTED => 10:22

Dist	COUNTY	ROUTE	POST MILES TOTAL PROJECT	SHEET No.	TOTAL SHEETS

REGISTERED CIVIL ENGINEER DATE

PLANS APPROVAL DATE

REGISTERED PROFESSIONAL ENGINEER No. Exp. CIVIL STATE OF CALIFORNIA

THE STATE OF CALIFORNIA OR ITS OFFICERS OR AGENTS SHALL NOT BE RESPONSIBLE FOR THE ACCURACY OR COMPLETENESS OF SCANNED COPIES OF THIS PLAN SHEET.

QUANTITIES

MINOR CONCRETE (WATER QUALITY OUTLET RISER) 5.1 CY
12" CSP (0.079" THICK) 3.5 LF
MISCELLANEOUS METAL (OVERFLOW RISER):

LADDER	10 LB/LF
DEBRIS RACK CAGE	204 LB
ANCHOR BOLTS	9 LB
WIRE MESH & SUPPORT FRAME	101 LB
GUIDE ANGLES	9 LB
BAND CLAMP	9 LB

DESIGN DATA

REINFORCED CONCRETE:
MINOR CONCRETE
Fy= 60,000 PSI

NOTE:

1. Seal bolt holes and coat connection steel with asphalt mastic (ASTM A491). Trowel asphalt mastic a minimum of 1/2" thick on and around connection steel. Use mastic to fill corrugations behind washer plates.

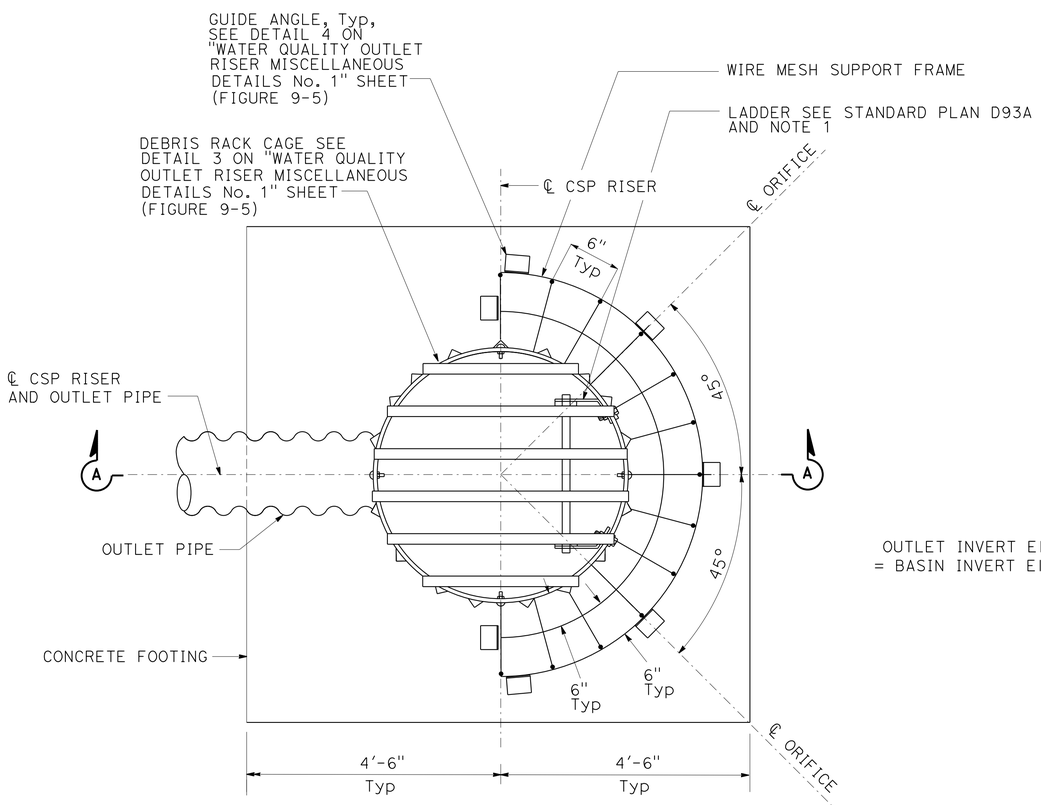

PLAN

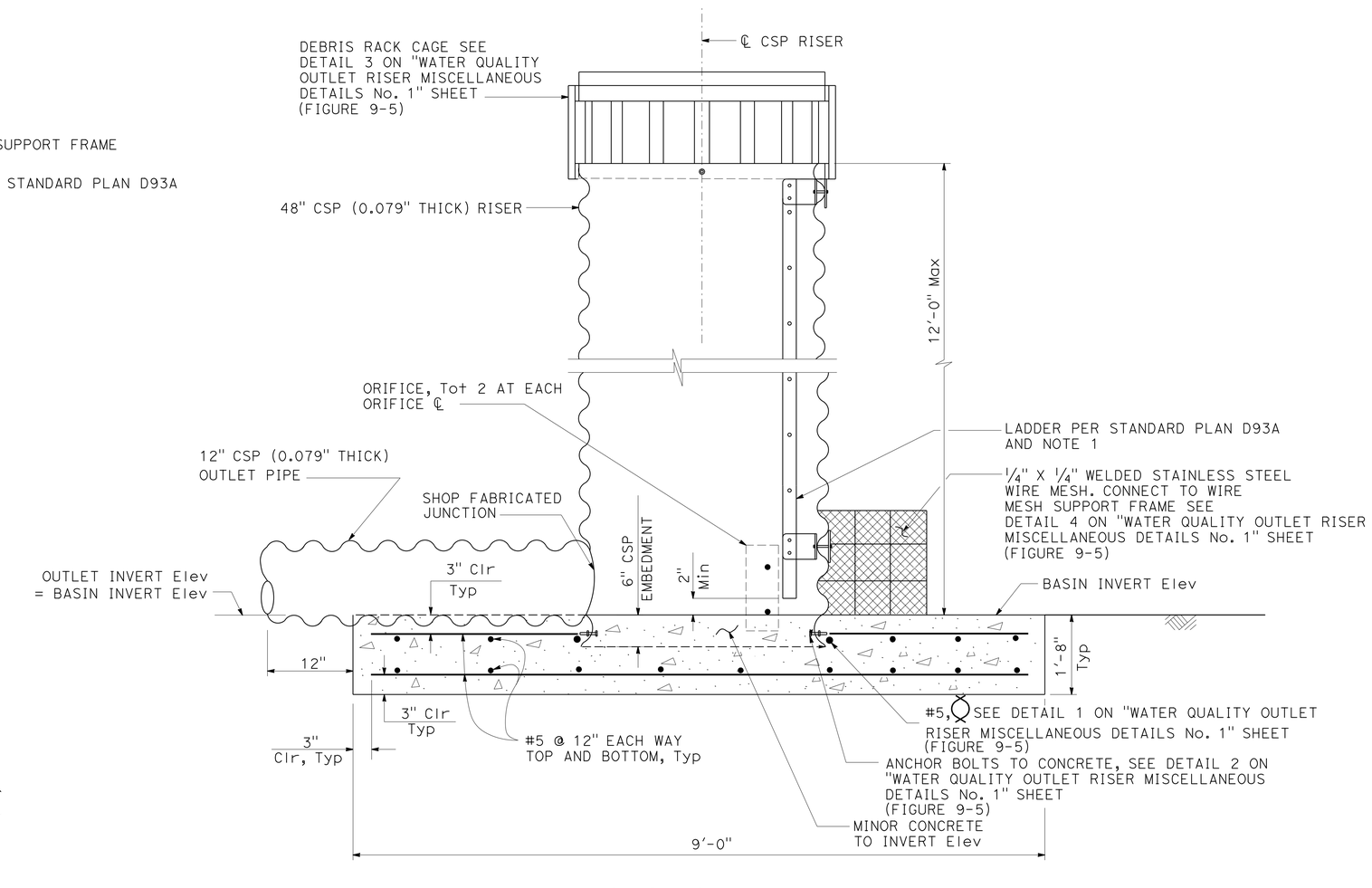

SECTION A-A

WATER QUALITY OUTLET RISER TYPE 1

NO SCALE

FIGURE 9-2

STATE OF CALIFORNIA - DEPARTMENT OF TRANSPORTATION
Caltrans®
FUNCTIONAL SUPERVISOR
CALCULATED-DESIGNED BY
CHECKED BY
REVISED BY
DATE REVISED

LAST REVISION 00-00-00
DATE PLOTTED => 17-JUN-2013
TIME PLOTTED => 10:22

Dist	COUNTY	ROUTE	POST MILES TOTAL PROJECT	SHEET No.	TOTAL SHEETS

REGISTERED CIVIL ENGINEER DATE

PLANS APPROVAL DATE

REGISTERED PROFESSIONAL ENGINEER No. Exp. CIVIL STATE OF CALIFORNIA

THE STATE OF CALIFORNIA OR ITS OFFICERS OR AGENTS SHALL NOT BE RESPONSIBLE FOR THE ACCURACY OR COMPLETENESS OF SCANNED COPIES OF THIS PLAN SHEET.

QUANTITIES

MINOR CONCRETE (WATER QUALITY OUTLET RISER):

BASIN SLAB	4.2 CY
CSP ENCASEMENT	0.46 CY/LF
FOOTING	3.3 CY

12" CSP (0.079" THICK)

MISCELLANEOUS METAL:

LADDER	10 LB/LF
DEBRIS RACK CAGE	204 LB
ANCHOR BOLTS	26 LB
WIRE MESH & SUPPORT FRAME	101 LB
GUIDE ANGLES	9 LB
BAND CLAMP	9 LB

DESIGN DATA

REINFORCED CONCRETE:

MINOR CONCRETE
Fy = 60,000 PSI

NOTE:

1. Seal bolt holes and coat connection steel with asphalt mastic (ASTM A491). Trowel asphalt mastic a minimum of ½" thick on and around connection steel. Use mastic to fill corrugations behind washer plate.

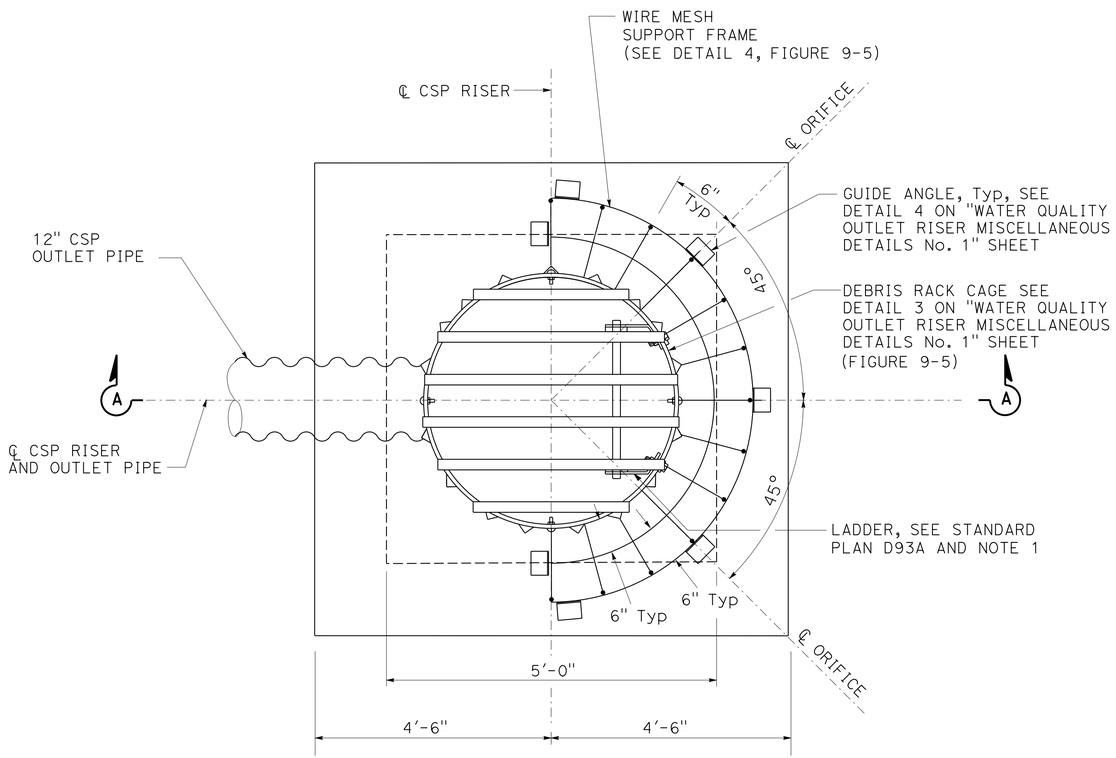

PLAN

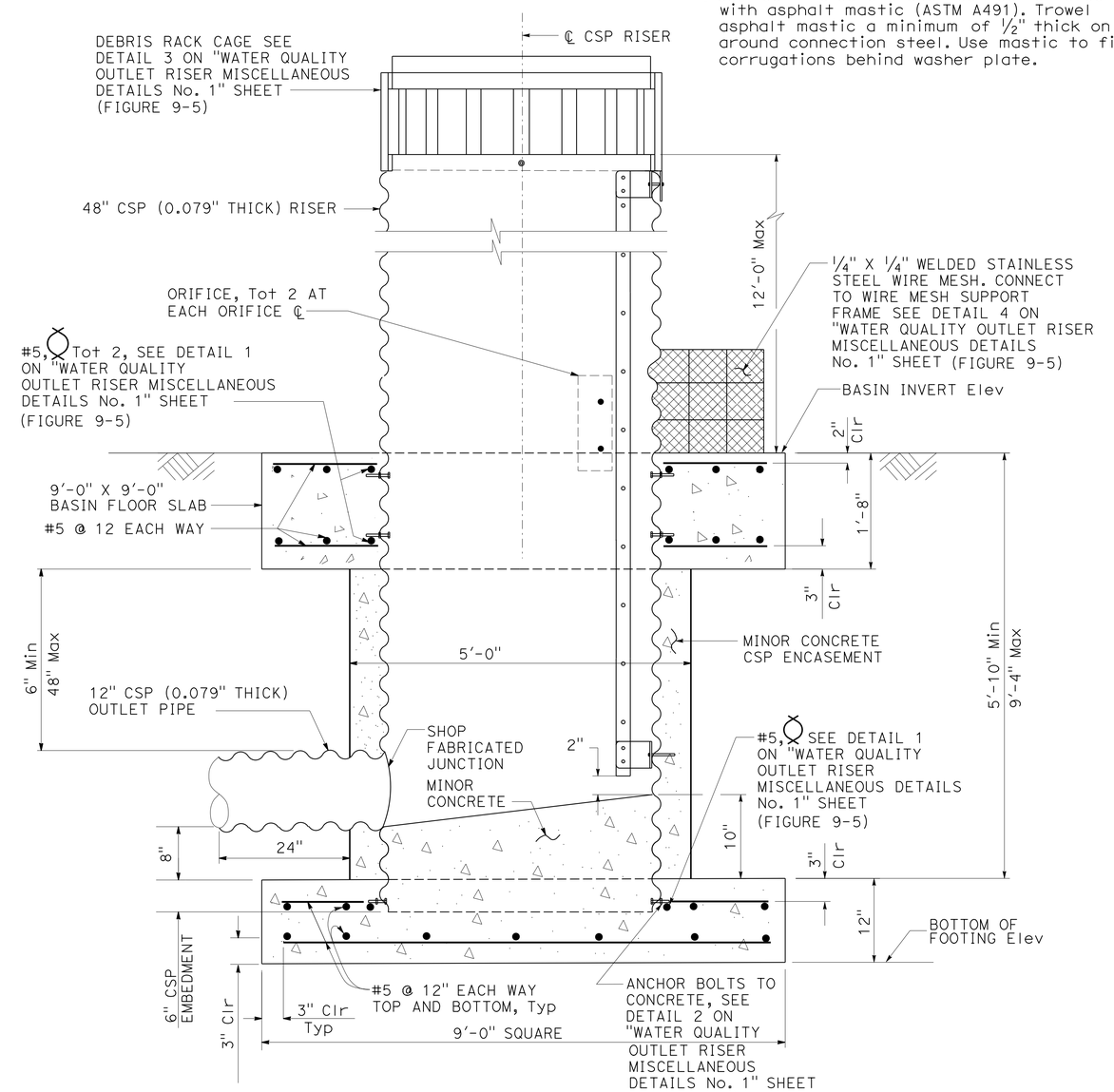

SECTION A-A

WATER QUALITY OUTLET RISER TYPE 2

FIGURE 9-3

STATE OF CALIFORNIA - DEPARTMENT OF TRANSPORTATION

Caltrans®

FUNCTIONAL SUPERVISOR | CALCULATED-DESIGNED BY | CHECKED BY | REVISED BY | DATE REVISED

LAST REVISION 00-00-00 | DATE PLOTTED => 17-JUN-2013 | TIME PLOTTED => 10:22

Dist	COUNTY	ROUTE	POST MILES TOTAL PROJECT	SHEET No.	TOTAL SHEETS

REGISTERED CIVIL ENGINEER DATE

PLANS APPROVAL DATE

REGISTERED PROFESSIONAL ENGINEER No. Exp. CIVIL STATE OF CALIFORNIA

THE STATE OF CALIFORNIA OR ITS OFFICERS OR AGENTS SHALL NOT BE RESPONSIBLE FOR THE ACCURACY OR COMPLETENESS OF SCANNED COPIES OF THIS PLAN SHEET.

QUANTITIES

MINOR CONCRETE (WATER QUALITY OUTLET RISER) 5.1 CY
12" CSP (0.079" THICK) 3.5 LF
MISCELLANEOUS METAL (OVERFLOW RISER):

LADDER	10 LB/LF
RISER CAP	215 LB
ANCHOR BOLTS	9 LB
WIRE MESH AND SUPPORT FRAME	101 LB
GUIDE ANGLES	9 LB
BAND CLAMP	9 LB

DESIGN DATA

REINFORCED CONCRETE:
MINOR CONCRETE
Fy= 60,000 PSI

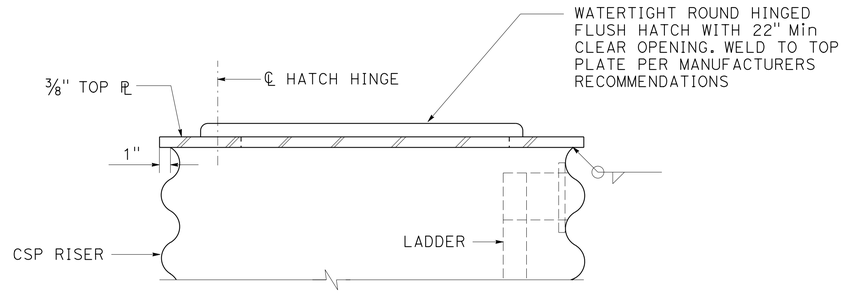

RISER CAP DETAIL

NOTE:

1. Seal bolt holes and coat connection steel with asphalt mastic (astm a491). Trowel asphalt mastic a minimum of 1/2" thick on and around connection steel. Use mastic to fill corrugations behind washer plates.

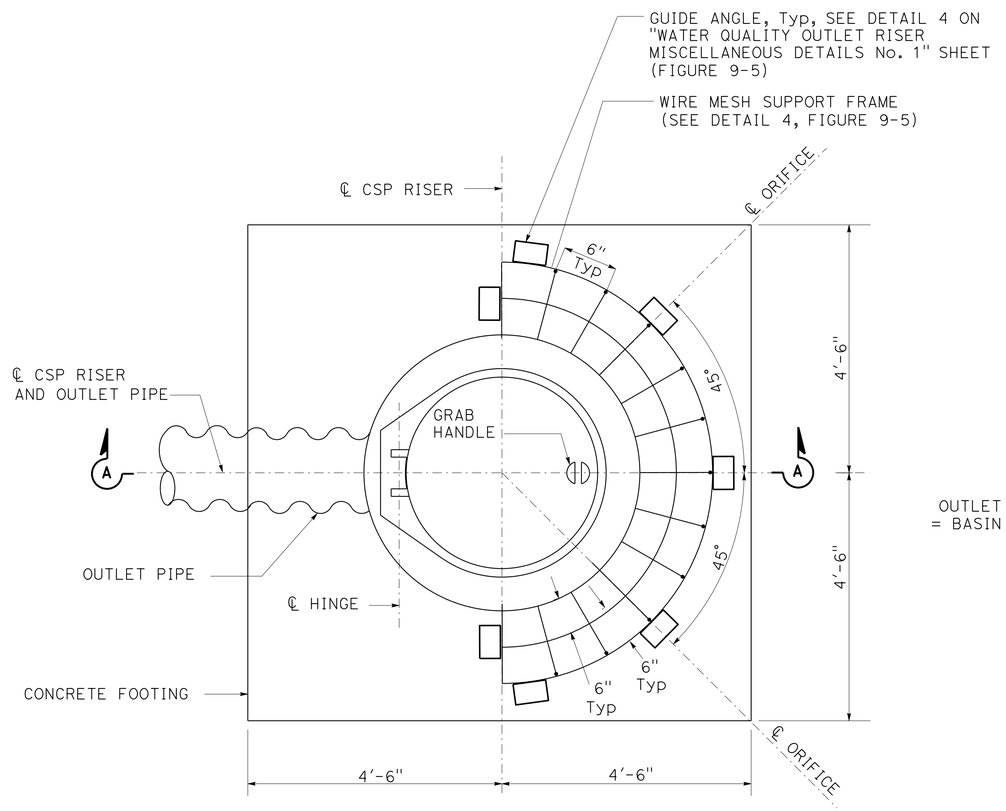

PLAN

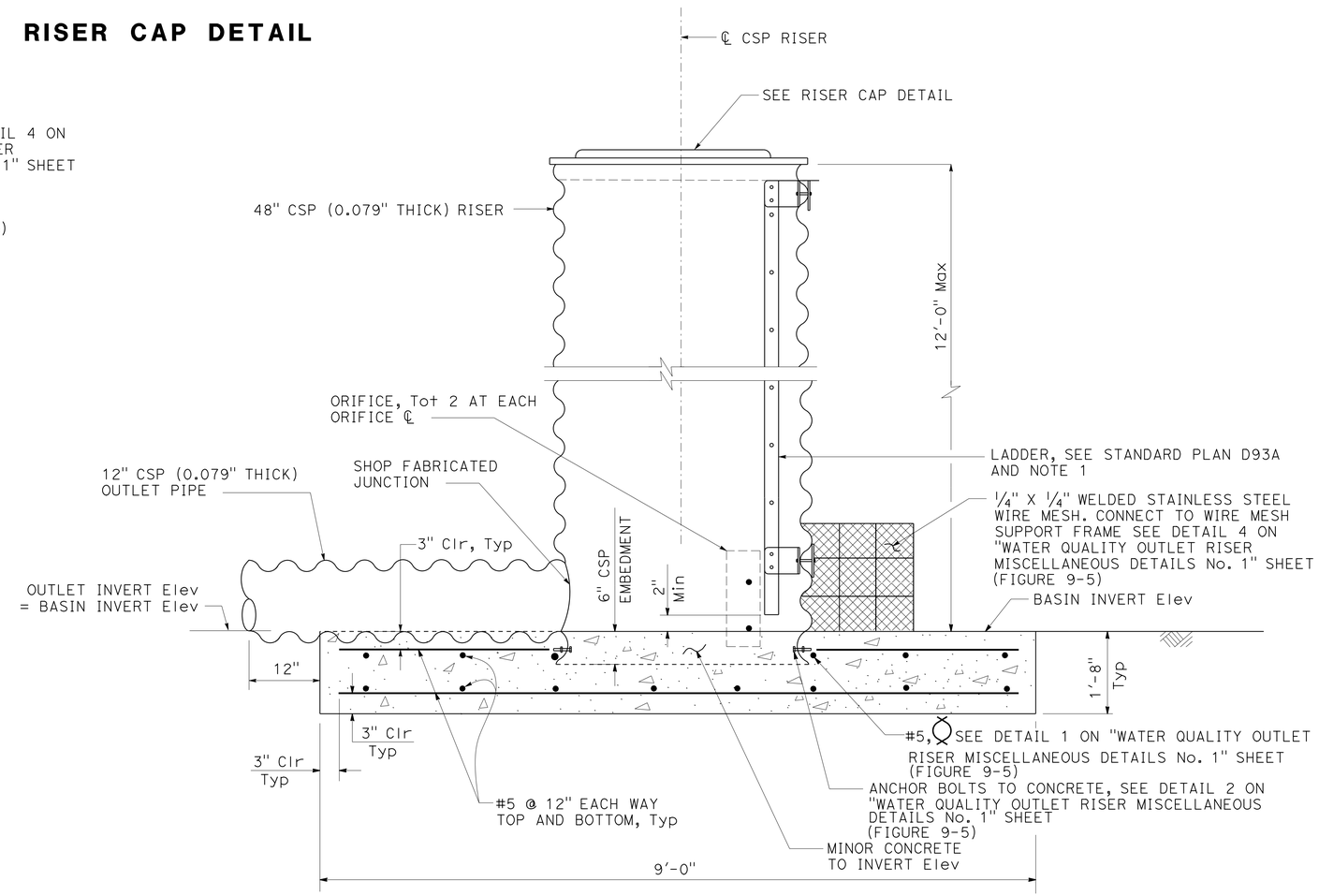

SECTION A-A

WATER QUALITY OUTLET RISER TYPE 3

FIGURE 9-4

REVISED BY | DATE REVISED | CALCULATED-DESIGNED BY | CHECKED BY | FUNCTIONAL SUPERVISOR

STATE OF CALIFORNIA - DEPARTMENT OF TRANSPORTATION

Caltrans

LAST REVISION 00-00-00 | DATE PLOTTED => 17-JUN-2013 | TIME PLOTTED => 10:23

Dist	COUNTY	ROUTE	POST MILES TOTAL PROJECT	SHEET No.	TOTAL SHEETS

REGISTERED CIVIL ENGINEER DATE

PLANS APPROVAL DATE

REGISTERED PROFESSIONAL ENGINEER No. Exp. CIVIL STATE OF CALIFORNIA

THE STATE OF CALIFORNIA OR ITS OFFICERS OR AGENTS SHALL NOT BE RESPONSIBLE FOR THE ACCURACY OR COMPLETENESS OF SCANNED COPIES OF THIS PLAN SHEET.

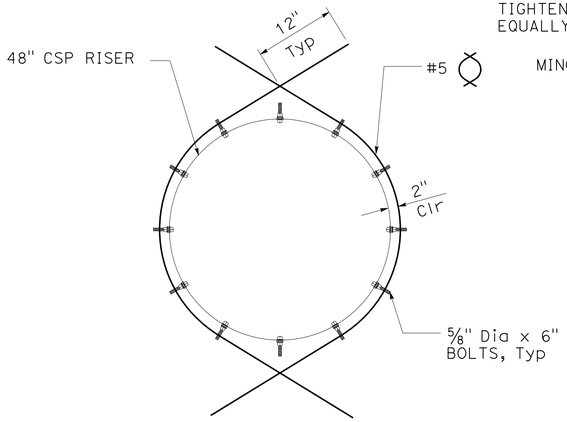

DETAIL 1

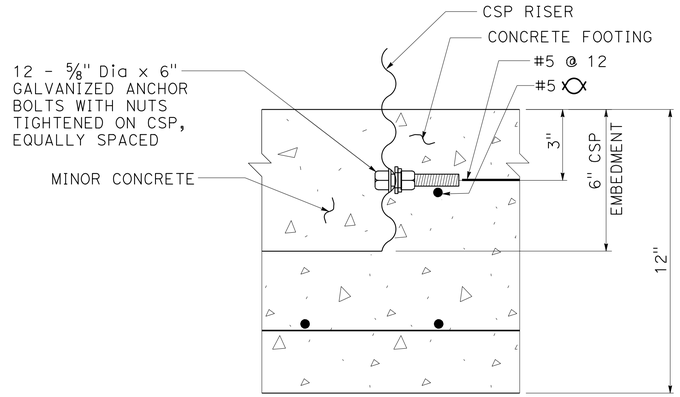

DETAIL 2

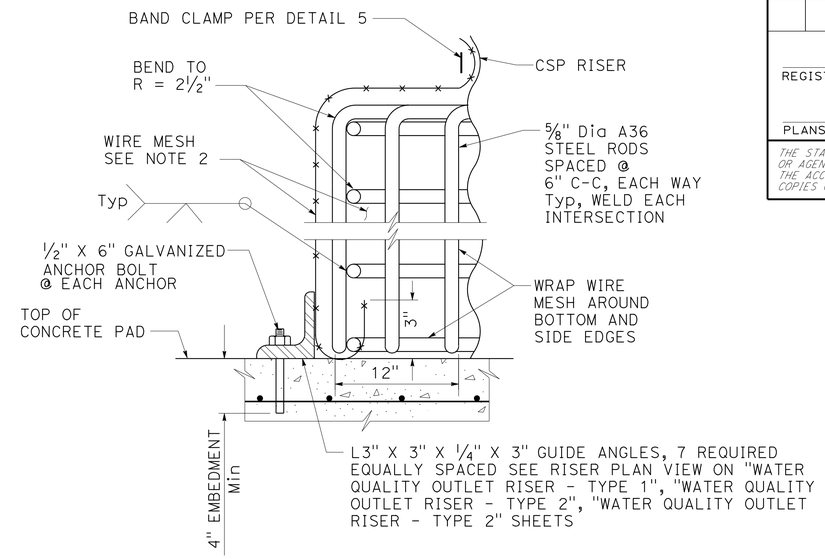

DETAIL 4

WIRE MESH SUPPORT FRAME

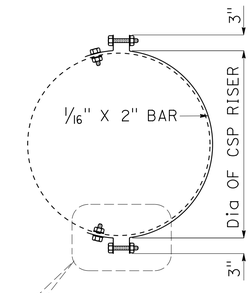

DETAIL 5

BAND CLAMP

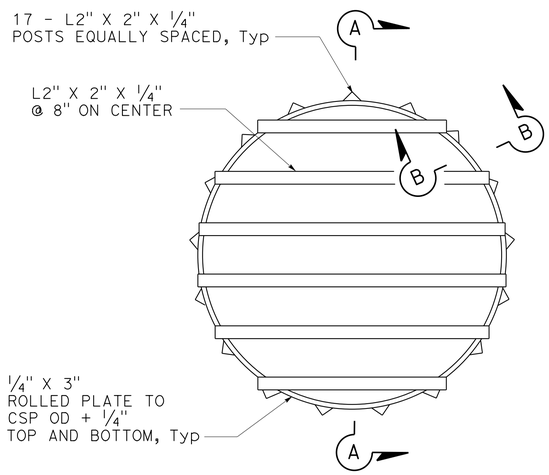

PLAN

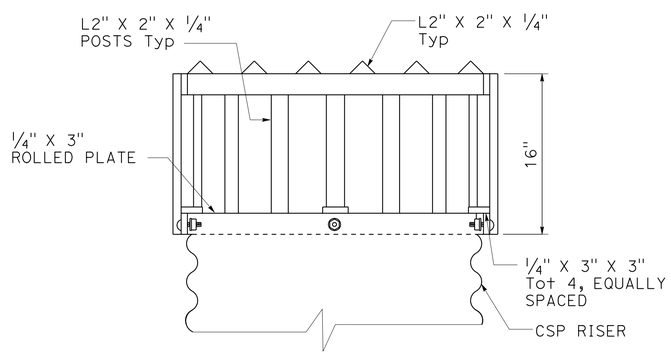

SECTION A-A

DETAIL 3

DEBRIS RACK CAGE

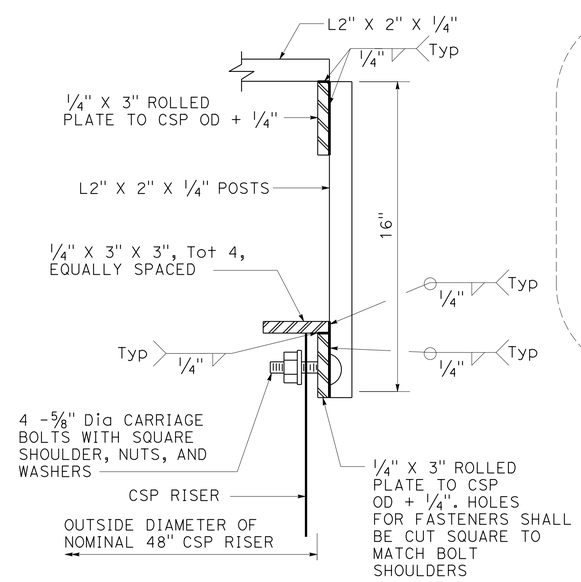

SECTION B-B

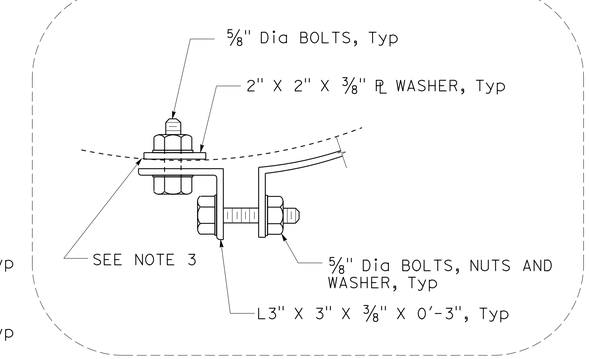

NOTES:

1. All hardware and fabrication materials shall be galvanized except as noted.
2. 1/4" x 1/4" (4 mesh per 1") 0.032" wire Dia, Type 304 stainless steel.
3. Seal bolt holes and coat connection steel with asphalt mastic (ASTM A491). Trowel asphalt mastic a minimum of 1/2" thick on and around connection steel. Use mastic to fill corrugations behind washer plates.

WATER QUALITY OUTLET RISER MISCELLANEOUS DETAILS No.1

FIGURE 9-5

STATE OF CALIFORNIA - DEPARTMENT OF TRANSPORTATION

Caltrans

FUNCTIONAL SUPERVISOR

CALCULATED-DESIGNED BY

CHECKED BY

REVISED BY

DATE REVISED

LAST REVISION 00-00-00 DATE PLOTTED => 17-JUN-2013 TIME PLOTTED => 10:23

Dist	COUNTY	ROUTE	POST MILES TOTAL PROJECT	SHEET No.	TOTAL SHEETS

REGISTERED CIVIL ENGINEER DATE

PLANS APPROVAL DATE

REGISTERED PROFESSIONAL ENGINEER No. Exp. CIVIL STATE OF CALIFORNIA

THE STATE OF CALIFORNIA OR ITS OFFICERS OR AGENTS SHALL NOT BE RESPONSIBLE FOR THE ACCURACY OR COMPLETENESS OF SCANNED COPIES OF THIS PLAN SHEET.

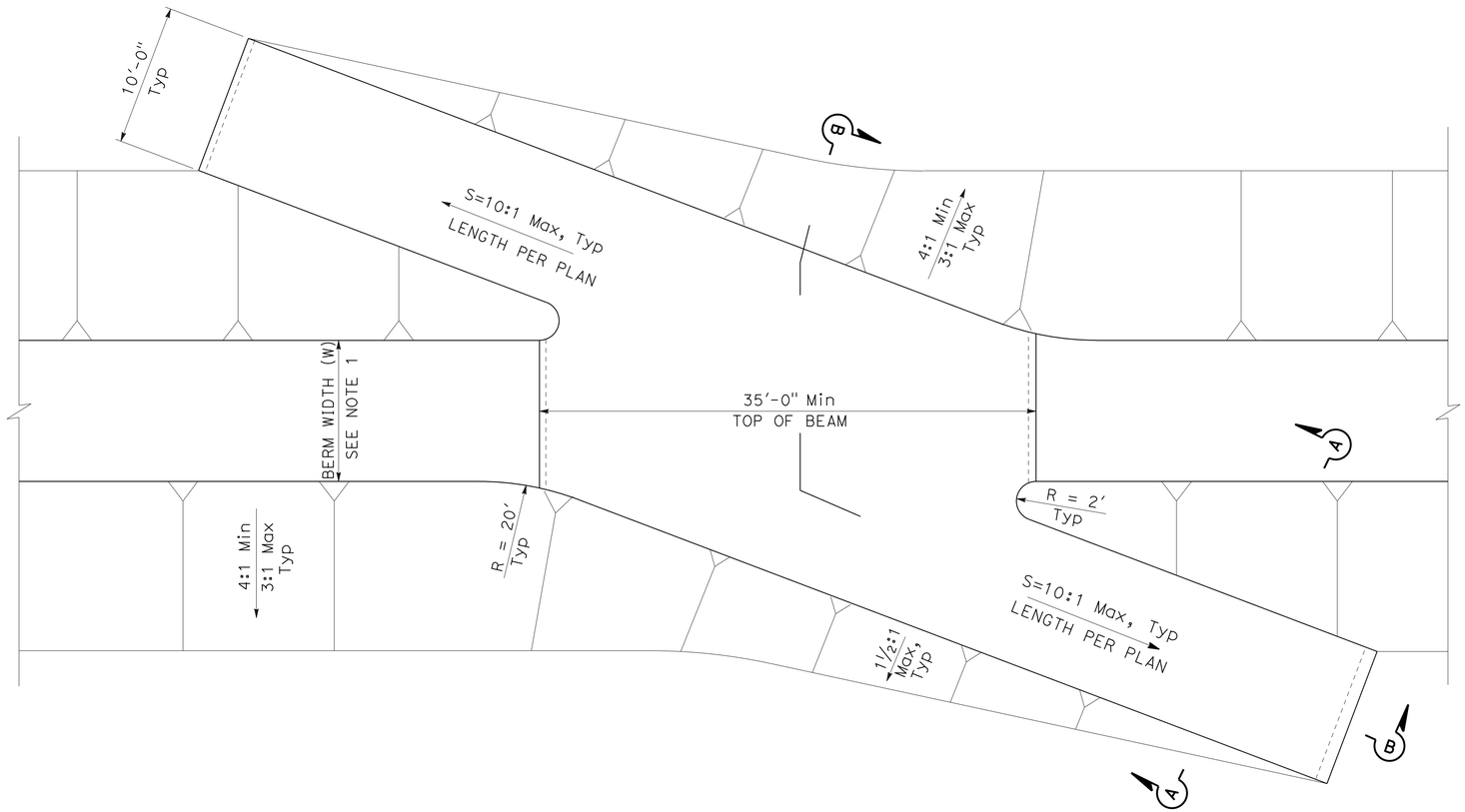

PLAN

NOTE:

1. See project plans for berm width (W).

DESIGN DATA

REINFORCED CONCRETE:

Minor Concrete

F_y = 60,000 psi

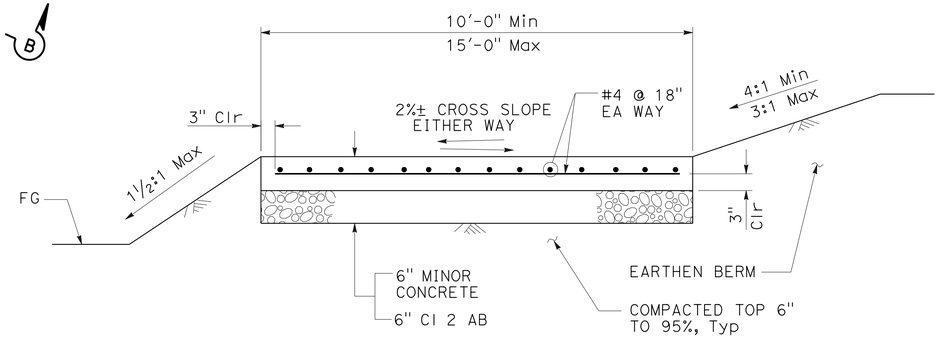

SECTION A-A

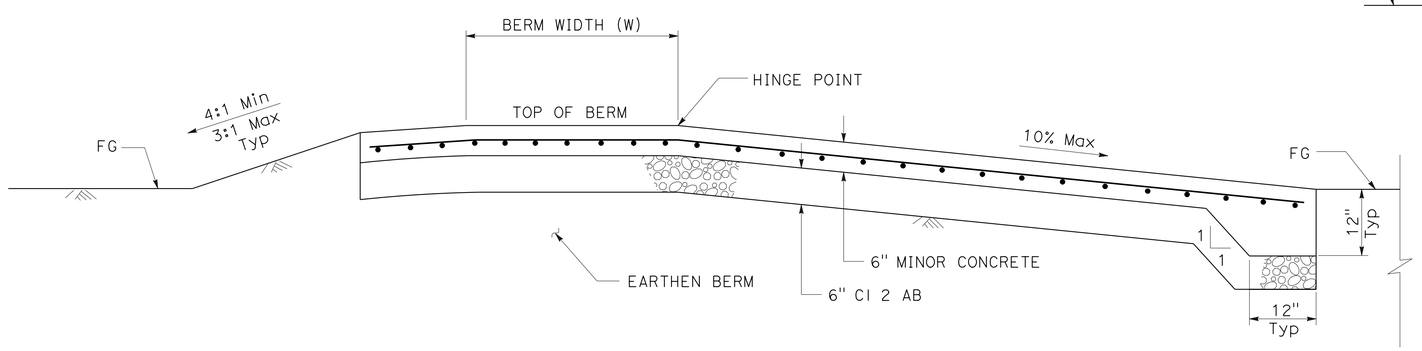

SECTION B-B

CONSTRUCTION DETAILS
MAINTENANCE VEHICLE ACCESS RAMP

NO SCALE

FIGURE 10-1

STATE OF CALIFORNIA - DEPARTMENT OF TRANSPORTATION

Caltrans

FUNCTIONAL SUPERVISOR

CALCULATED-DESIGNED BY

CHECKED BY

REVISED BY

DATE REVISED

LAST REVISION 00-00-00

DATE PLOTTED => 17-JUN-2013

TIME PLOTTED => 10:23